ASCE NATIONAL CAPITAL SECTION eNewsletter
National Capital Section
FOUNDED 1916

MAY 2016

DR. Z's CORNER

Conquering the FE & PE exams

Problems & Applications

This Month's Problems

- FE CIVIL Exam & Topics - Number of Questions
- Types of Calculators / For FE and PE Exams
- Technology Usage / Definite Integrals
- Technology Usage / Decimal & Binary Numbers
- Surveying / Bearings & Azimuths
- Surveying / Traverse Computations
- Centroids & Moments of Inertia
- Statics / Simple & Cantilever Beams
- Statics / Shear and Moment Diagrams
- Strength of Materials / Determinate Frames
- Strength of Materials / Determinate Structures
- Strength of Material / Flexural Stresses
- Reinforced Concrete Beam

FUNDAMENTALS OF ENGINEERING

CIVIL EXAM TOPICS
Computer-Based Test (CBT)

Total Number of Questions: 110
Time: 6 hours

The new Civil FE Computer-Based Test (CBT) consists of 110 multiple-choice questions (Each problem only one question) the examinee will have 6 hours to complete the test.

- **Mathematics (Approx. 9 questions*)**
- **Probability and Statistics (5 questions)**
- **Computational Tools (5 questions)**
- **Ethics and Professional Practice (5 questions)**
- **Engineering Economics (5 questions)**
- **Statics (9 questions)**
- **Dynamics (5 questions)**
- **Mechanics of Materials (9 questions)**
- **Civil Engineering Materials (5 questions)**
- **Fluid Mechanics (5 questions)**
- **Hydraulics and Hydrologic Systems (10 questions)**
- **Structural Analysis (8 questions)**
- **Structural Design (8 questions)**
- **Geotechnical Engineering (12 questions)**
- **Transportation Engineering (10 questions)**
- **Environmental Engineering (8 questions)**

* Here the number of questions are the average values taken from the NCEES Reference Handbook (Version 9.1 / Computer-Based Test)

TYPES OF CALCULATORS

ACCEPTABLE FOR USE IN FE / PE EXAMS

To protect the integrity of FE/PE exams, NCEES limits the types of calculators you may bring to exam sites. The only calculator models acceptable for use during the 2016 exams are as follows:

Casio: All fx-115 models. Any Casio calculator must contain fx-115 in its model name. Examples of acceptable Casio fx-115 models include (but are not limited to):

- fx-115 MS
- fx-115 MS Plus
- fx-115 MS SR
- fx-115 ES
- fx-115 ES Plus

Texas Instruments: All TI-30X and TI-36X models. Any Texas Instruments calculator must contain either TI-30X or TI-36X in its model name. Examples of acceptable TI-30X and TI-36X models include (but are not limited to):

- TI-30Xa
- TI-30Xa SOLAR
- TI-30Xa SE
- TI-30XS Multiview
- TI-30X IIB
- TI-30X IIS
- TI-36X II
- TI-36X SOLAR
- TI-36X Pro

Hewlett Packard: The HP 33s and HP 35s models, but no others.

CASIO / *fx*-115 ES PLUS

MODE

(1) COMP
(2) CMPLX
(3) STAT
(4) BASE-N
(5) EQN
(6) MATRIX
(7) TABLE
(8) VECTOR

SHIFT **SETUP**

(1) Mth-IO
(2) Line-IO
(3) Deg
(4) Rad
(5) Gra
(6) Fix
(7) Sci
(8) Norm

Frequently asked two Number Systems:

1- Decimal Number System (base 10)
2- Binary Number System (base 2)

In Decimal System 10 different digits are used to create any number, but in Binary System only 0s and 1s are used to create any number

DECIMAL	BINARY
2	10
3	11
5	101
6	110
8	1000
9	1001
10	1010
12	1100
14	1110
15	1111
19	10011
25	11001

DEFINITE INTEGRALS
AREAS UNDER CURVES
Using CASIO FX-115 ES PLUS

Problem:

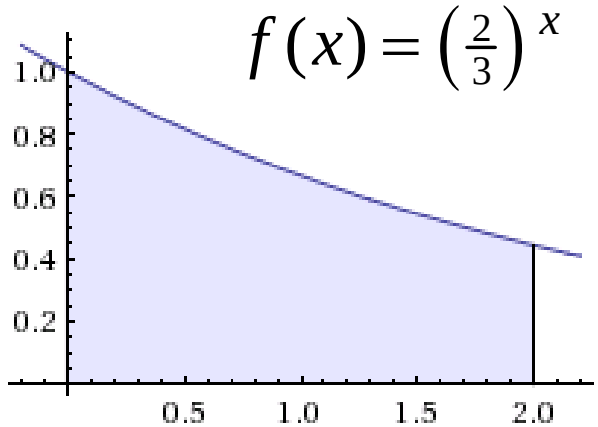

The area under the graph shown is most nearly:

(A) 5.06
(B) 4.25
(C) 2.15
(D) 1.37

SAMPLE (FE) PROBLEMS

MORNING SESSION

MATHEMATICS

Problem:

$$I = \int_0^3 x^2 \,.\, (e^{x^2})\, dx$$

The value of the definite integral shown above is most nearly:

(A) **20**

(B) **3986**

(C) **1112**

(D) **11432**

Comments:

At first sight, this problem seems highly complex, but it is not. You can easily get the correct answer in exactly 15 seconds. Yes, in 15 seconds!

What can you do with your CASIO FX-115 ES *PLUS* ?

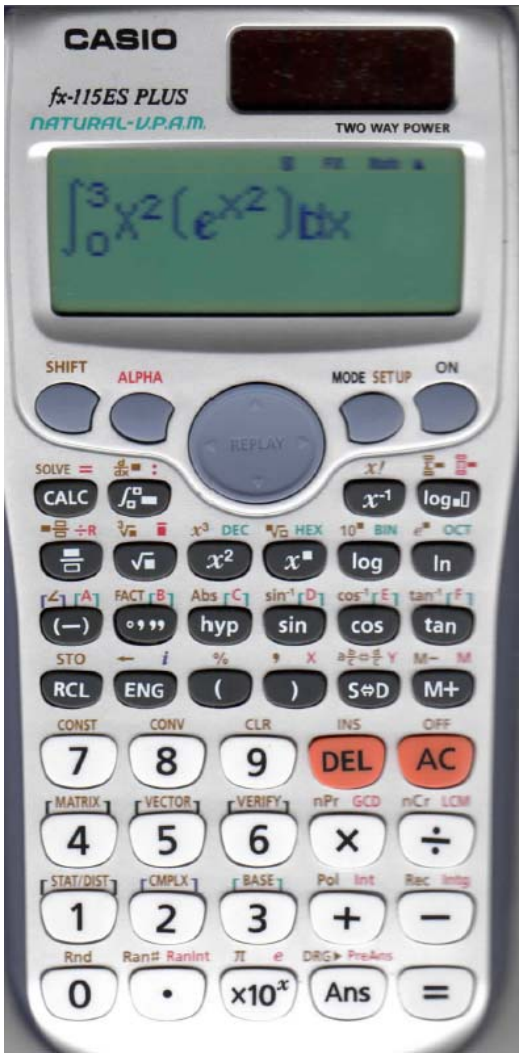

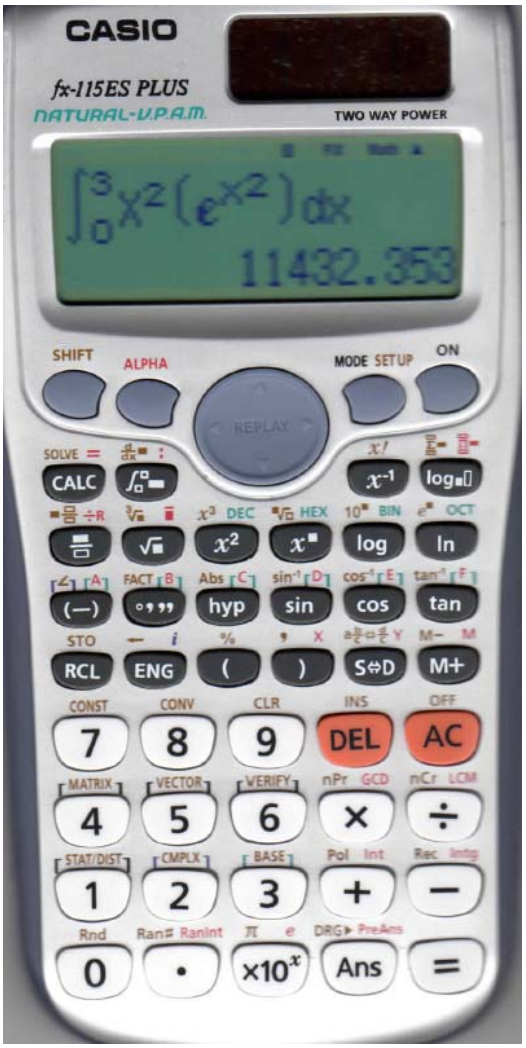

Enter the equation
Into the calculator

Just hit the [=] KEY
and wait 15 seconds

Answer =

11432.353

ASCE-420
ZEYTINCI
FALL 2014

BEARINGS & AZIMUTHS

SURVEYING

Problem: (Bearings & Azimuths)

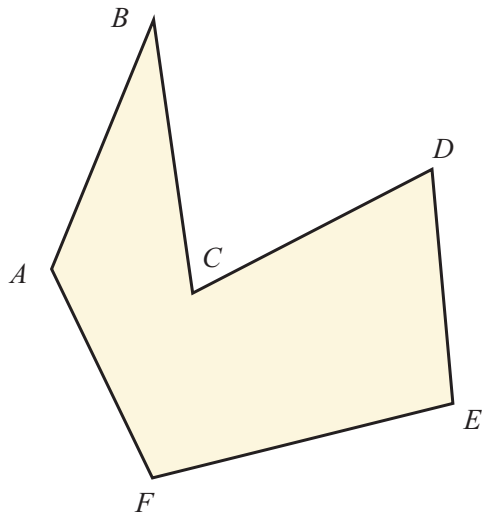

Internal angles:

$\measuredangle A = 130^{o}\,14'\,11''$
$\measuredangle B = 32^{o}\,54'\,19''$
$\measuredangle C = 286^{o}\,02'\,23''$
$\measuredangle D = 63^{o}\,48'\,21''$
$\measuredangle E = 105^{o}\,07'\,27''$
$\measuredangle F = 101^{o}\,53'\,19''$

Bearing of the course AB : N $20^{o}\,00'\,00''$ E

A closed traverse is given as shown in the figure. Using the listed internal angles and the bearing for the side AB answer the following:

(1) the north azimuth of AB (deg-min-sec) is most nearly

(A) $10^{o}\,20'\,30''$
(B) $20^{o}\,00'\,00''$
(C) $30^{o}\,40'\,00''$
(D) $100^{o}\,00'\,00''$

Azim $(AB) = ?$

(2) the north azimuth of BC (deg-min-sec) is most nearly

(A) $238^{o}\,43'\,34''$
(B) $222^{o}\,05'\,41''$
(C) $190^{o}\,12'\,28''$
(D) $167^{o}\,05'\,41''$

Azim $(BC) = ?$

(3) the north azimuth of CD (deg-min-sec) is most nearly

(A) $163^{o}\,43'\,18''$
(B) $112^{o}\,25'\,50''$
(C) $61^{o}\,03'\,18''$
(D) $81^{o}\,43'\,18''$

Azim $(CD) = ?$

ANSWERS

The figure is drawn not to scale

TRAVERSE COMPUTATIONS

SURVEYING

Problem: (Bearings & Azimuths)

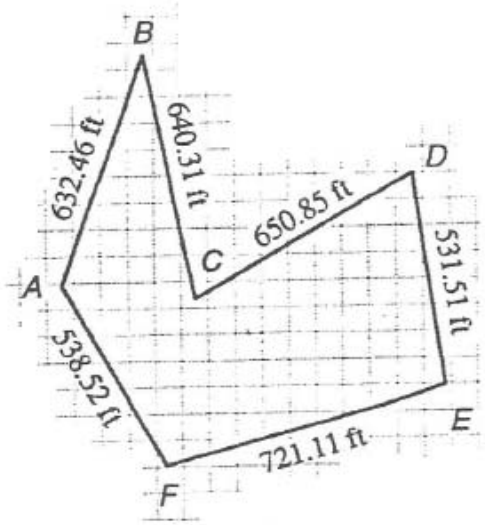

Int. Angles

A = 130-14-11
B = 32-54-19
C = 286-02-23
D = 63-48-21
E = 105-07-27
F = 101-53-19

Course	Length ft	Bearing deg-min-sec	Azimuth deg-min-sec
AB	632.46	N 20-00-00 E	20-00-00
BC	640.31	S 12-54-19 E	167-05-41
CD	650.85	N 61-03-18 E	61-03-18
DE	531.51	S 02-45-03 E	177-14-57
EF	721.11	S 72-07-30 W	252-07-30
FA	538.52	N 29-45-49 W	330-14-11

	Y coor.	X coor.
A	+ 100.00	+ 100.00
B	+ 694.25	+ 316.19
C	+ 70.04	+ 459.07
D	+ 384.96	+1028.49
E	– 146.00	+1053.89
F	– 367.42	+367.44

Error of closure = 0.852 feet
Precision = 1 in 4360
Area = 485,000 sq.ft
Area = 11.134 acres

BEARINGS & AZIMUTHS

SURVEYING

Problem: (Bearings & Azimuths)

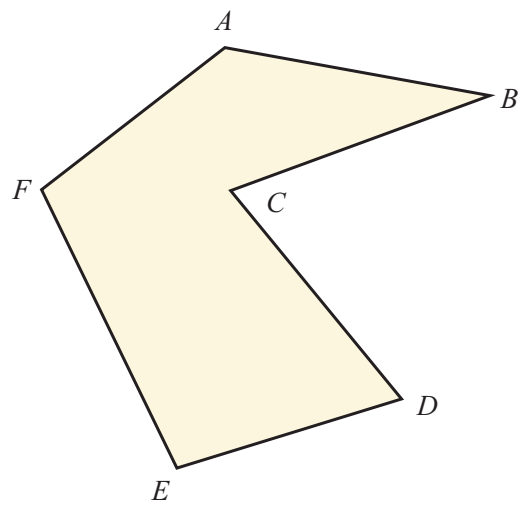

Internal angles:

$\measuredangle A = 130^{o}\,14'\,11''$
$\measuredangle B = 32^{o}\,54'\,19''$
$\measuredangle C = 286^{o}\,02'\,23''$
$\measuredangle D = 63^{o}\,48'\,21''$
$\measuredangle E = 105^{o}\,07'\,27''$
$\measuredangle F = 101^{o}\,53'\,19''$

Bearing of the course AB : S $80^{o}\,00'\,00''$ E

A closed traverse is given as shown in the figure. Using the listed internal angles and the bearing for the side AB answer the following:

(1) the north azimuth of AB (deg-min-sec) is most nearly

(A) $142^{o}\,29'\,424''$
(B) $159^{o}\,33'\,52''$
(C) $120^{o}\,10'\,20''$
(D) $100^{o}\,00'\,00''$

Azim $(AB) = ?$

(2) the north azimuth of BC (deg-min-sec) is most nearly

(A) $265^{o}\,13'\,54''$
(B) $247^{o}\,05'\,41''$
(C) $230^{o}\,40'\,20''$
(D) $162^{o}\,30'\,10''$

Azim $(BC) = ?$

(3) the north azimuth of CD (deg-min-sec) is most nearly

(A) $213^{o}\,20'\,58''$
(B) $180^{o}\,25'\,50''$
(C) $159^{o}\,36'\,30''$
(D) $141^{o}\,03'\,18''$

Azim $(CD) = ?$

ANSWERS

The figure is drawn not to scale

TRAVERSE COMPUTATIONS

SURVEYING

Problem: (Bearings & Azimuths)

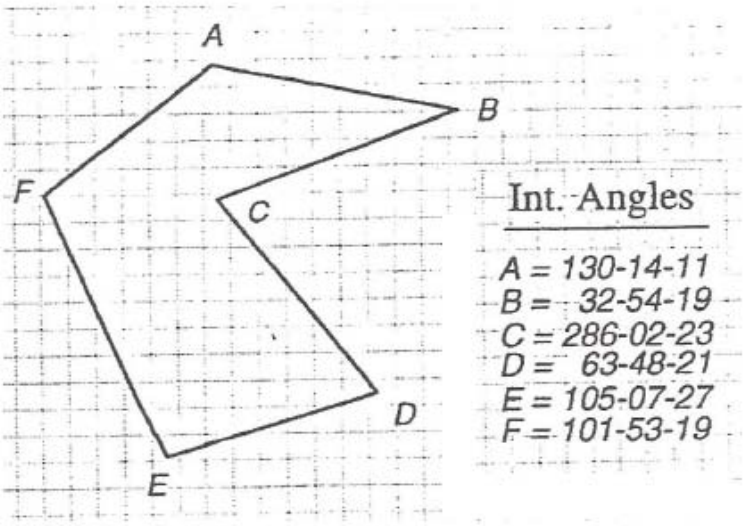

Course	Length ft	Bearing deg-min-sec	Azimuth deg-min-sec
AB	632.46	S 80-00-00 E	100-00-00
BC	640.31	S 67-05-41 W	247-05-41
CD	650.85	S 38-56-42 E	141-03-18
DE	531.51	S 77-14-57 W	257-14-57
EF	721.11	N 27-52-30 W	332-07-30
FA	538.52	N 50-14-11 E	050-14-11

	Y coor.	X coor.
A	+ 100.00	+ 100.00
B	– 9.71	+ 722.76
C	– 258.81	+ 132.85
D	– 764.90	+ 541.86
E	– 882.11	+ 23.38
F	– 244.55	– 313.88

Error of closure = 0.855 feet
Precision = 1 in 4340
Area = 485,000 sq.ft
Area = 11.134 acres

BEARINGS & AZIMUTHS

SURVEYING

Problem: (Bearings & Azimuths)

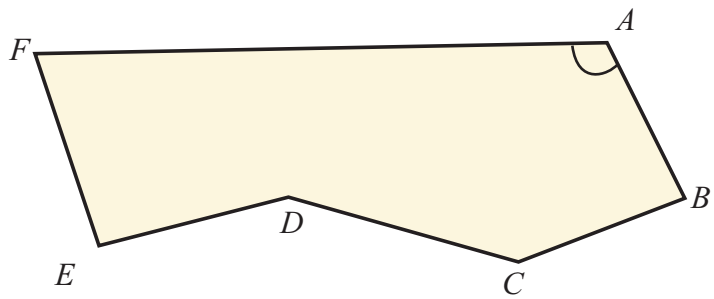

Internal angles:

$\measuredangle A = 91^{o}\,29'\,10''$
$\measuredangle B = 101^{o}\,23'\,10''$
$\measuredangle C = 156^{o}\,19'\,50''$
$\measuredangle D = 196^{o}\,35'\,15''$
$\measuredangle E = 85^{o}\,02'\,45''$
$\measuredangle F = 89^{o}\,09'\,50''$

Bearing of the course AB : S $01^{o}\,01'\,01''$ E

A closed traverse is given as shown in the figure. Using the listed internal angles and the bearing for the side AB answer the following:

(1) the north azimuth of AB (deg-min-sec) is most nearly

(A) $142^{o}\,29'\,424''$
(B) $159^{o}\,33'\,52''$
(C) $161^{o}\,10'\,12''$
(D) $178^{o}\,58'\,59''$

Azim $(AB) = ?$

(2) the north azimuth of BC (deg-min-sec) is most nearly

(A) $265^{o}\,13'\,54''$
(B) $257^{o}\,35'\,49''$
(C) $238^{o}\,49'\,28''$
(D) $162^{o}\,36'\,18''$

Azim $(BC) = ?$

(3) the north azimuth of CD (deg-min-sec) is most nearly

(A) $153^{o}\,26'\,54''$
(B) $281^{o}\,15'\,59''$
(C) $259^{o}\,16'\,57''$
(D) $114^{o}\,27'\,12''$

Azim $(CD) = ?$

ANSWER

The figure is drawn not to scale

Course : Surveying
Coordinator : Zeytinci

100/100

Traverse Computation :

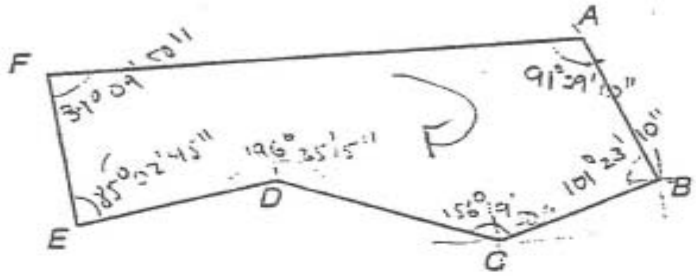

Bearing of AB :
S01-01-01 E

Point	Internal Angle
A	091-29-10
B	101-23-10
C	156-19-50
D	196-35-15
E	085-02-45
F	089-09-50

Notation :

91-29-10

91 degrees
29 minutes
10 seconds

A closed traverse is given as shown. Bearing of the side AB and all internal angles are listed as shown in the table.

a-) Determine the course bearings of the other sides.
b-) Determine the course azimuths of all sides.

Excellent

List all your answers in the table given below :

Course	Bearings	Azimuths
AB	S 01-01-01 E	178-58-59
BC	S 77-35-49 W	257-35-49
CD	N 78-44-01 W	281-15-59
DE	S 84-40-44 W	264-40-44
EF	N 00-22-01 W	351-37-59
FA	N 90-28-09 E	90-28-09

AB S 01-01-01 E

FUNDAMENTALS OF ENGINEERING

DETERMINATE BEAMS

STATICS & STRENGTH OF MATERIALS

FE/PE EXAM

Problem:

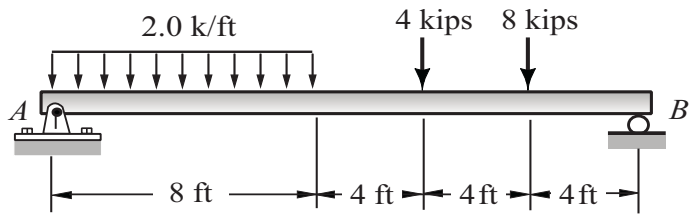

Support A : Pin
Support B : Roller

A simply supported beam is loaded as shown. Knowing that point "*C*" is the mid-point of the beam, answer the following questions:

1- the magnitude of the shear force (kips) at the mid-point of the beam is most nearly:

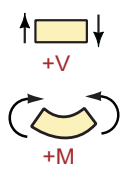

(A) 0
(B) 12
(C) 16
(D) 20

$$V_C = ?$$

2- the maximum bending moment (k-ft) in the beam is most nearly:

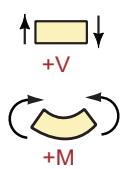

(A) 86
(B) 64
(C) 48
(D) 120

$$M_{max} = ?$$

ANSWERS

FUNDAMENTALS OF ENGINEERING

DETERMINATE BEAMS

STATICS & STRENGTH OF MATERIALS

Problem:

FE/PE EXAM

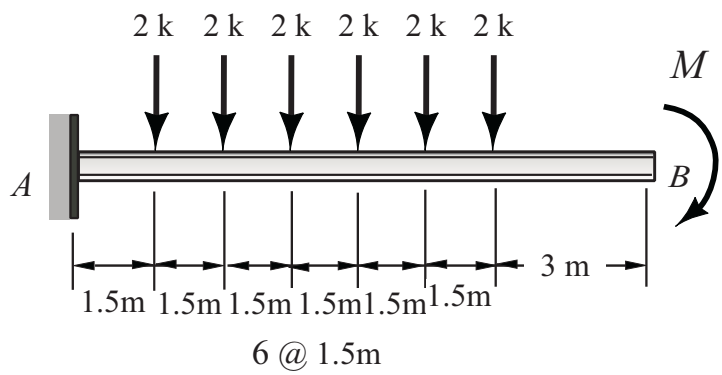

Support A : Fixed

The cantilever beam is loaded as shown in the figure. Using the given loads answer the following questions:

(1) Knowing that the moment at support *A* is 72 ft-kips determine the value of the moment at *B* is most nearly

(A) 25
(B) 14
(C) 12
(D) 9

$M = ?$

(2) The magnitude of the bending moment (ftt-kips) at the mid-point of the beam (6-feet from A) is most nearly, $M_{mid\ point}$

(A) 18
(B) 24
(C) 29
(D) 45

$M_{\text{mid point}} = ?$

ANSWERS

BEAMS WITH INTERNAL HINGES

DOMAIN: STATICS

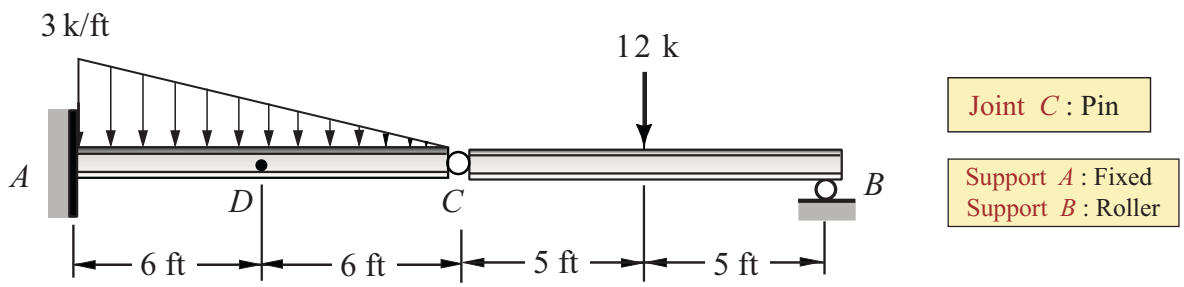

Two beams are connected with an internal pin at C as shown. Using the given loads and the support conditions, determine the following:

(1) the vertical support reaction (kips) at support B

(A) 4.50
(B) 4.75
(C) 5.00
(D) 6.00

(2) the bending moment (ft-kips) at support A

(A) 238
(B) 214
(C) 144
(D) 124

(3) the bending moment (ft-kips) at point D

(A) 48
(B) 45
(C) 36
(D) 30

SIMPLE BEAM SUPPORT REACTIONS

SHORTCUT FORMULAS

FE/PE EXAM

1

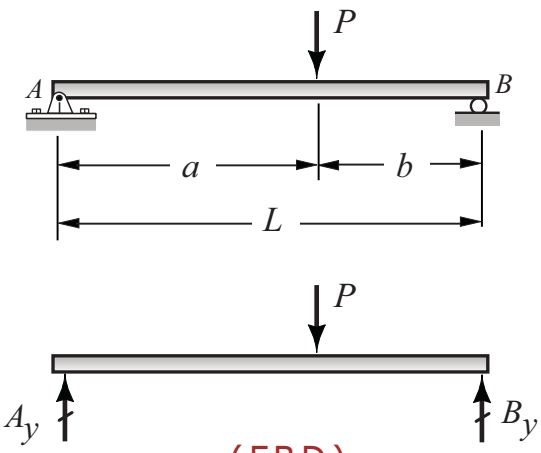

(FBD)

$$A_y = P\left(\frac{b}{L}\right)$$

$$B_y = P\left(\frac{a}{L}\right)$$

2

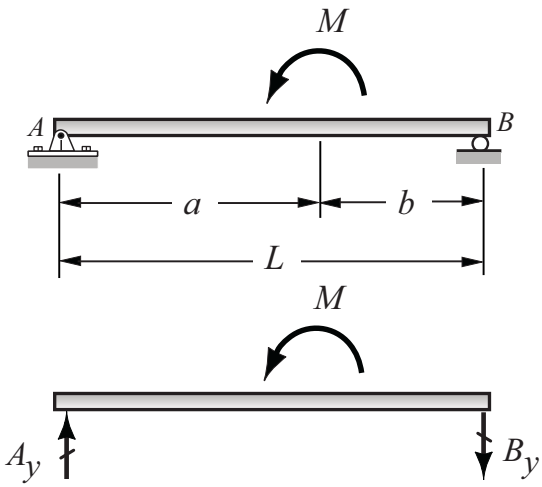

(FBD)

$$A_y = \frac{M}{L}$$

$$B_y = \frac{M}{L}$$

SIMPLE BEAM SUPPORT REACTIONS

SUPERPOSITION METHOD

FE/PE EXAM

1

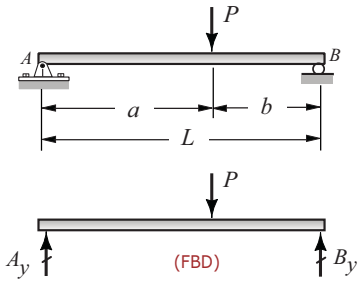

$$A_y = P\left(\frac{b}{L}\right)$$

$$B_y = P\left(\frac{a}{L}\right)$$

2

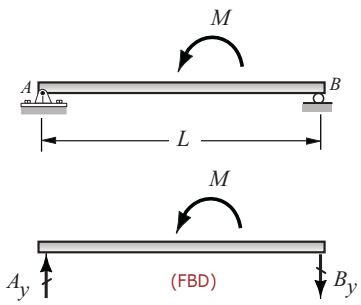

$$A_y = \frac{M}{L}$$

$$B_y = \frac{M}{L}$$

Example-1

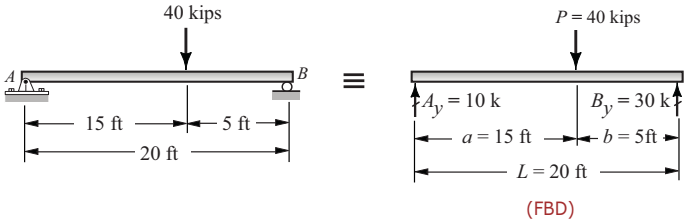

$$A_y = P\left(\frac{b}{L}\right) = 40\left(\frac{5}{20}\right) = 10 \text{ k} \uparrow$$

$$B_y = P\left(\frac{b}{L}\right) = 40\left(\frac{15}{20}\right) = 30 \text{ k} \uparrow$$

Example-2

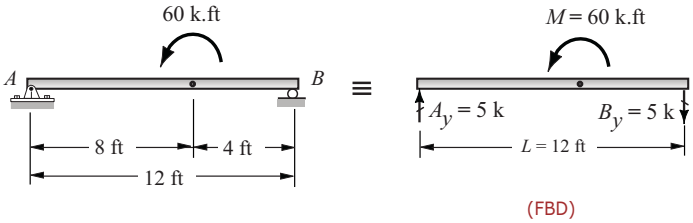

$$A_y = \frac{M}{L} = \frac{60}{12} = 5 \text{ kips} \uparrow$$

$$B_y = \frac{M}{L} = \frac{60}{12} = 5 \text{ kips} \downarrow$$

Example-3

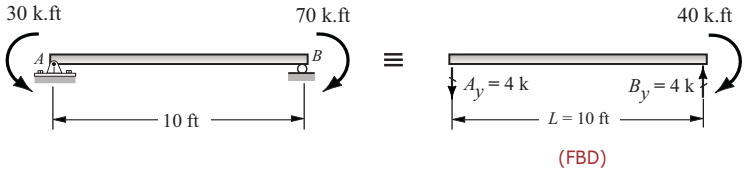

$$A_y = \frac{M}{L} = \frac{40}{10} = 4 \text{ kips} \downarrow$$

$$B_y = \frac{M}{L} = \frac{40}{10} = 4 \text{ kips} \uparrow$$

Problem: (Beam Support Reactions / Superposition Method)

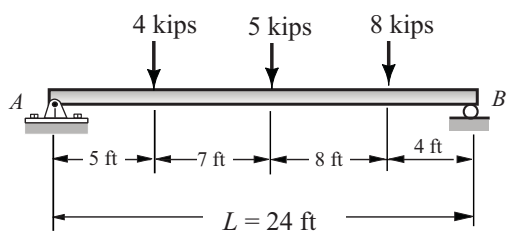

Support A : Hinge
Support B : Roller

Determine the support reactions using the superposition (shortcut) method.

1

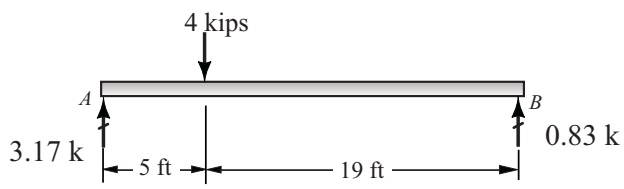

2

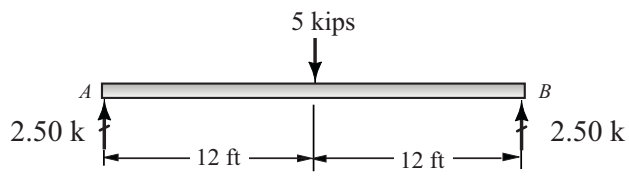

3

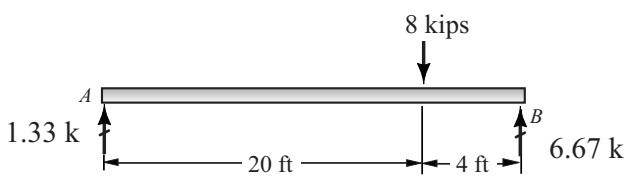

$$A_y = 3.17\text{ k} + 2.5\text{ k} + 1.33\text{ k} = 7.0\text{ kips} \uparrow$$

$$B_y = 0.83\text{ k} + 2.5\text{ k} + 6.67\text{ k} = 10.0\text{ kips} \uparrow$$

SupportReactions

$A_y = 7$ kips
$B_y = 10$ kips

Problem: (Cantilever Beams)

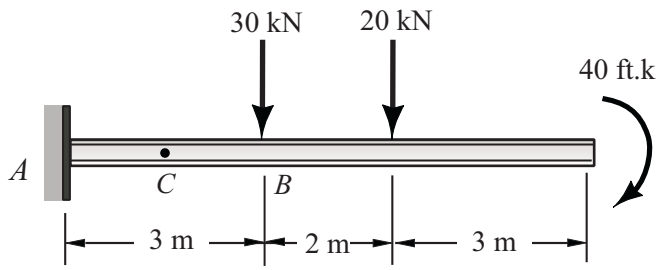

FE/PE EXAM

Support A : Fixed

The cantilever beam is loaded as shown in the figure. Using the given loads and the support condition, answer the following questions:

(1) The vertical support reaction (kN) at the fixed support, A_y

(A) 80
(B) 75
(C) 60
(D) 50

(2) The bending moment (kN.m) at the fixed support, M_A

(A) 230
(B) 340
(C) 425
(D) 560

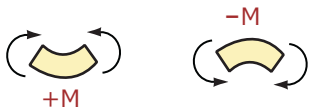

(3) The moment (kN.m) at C, the mid-point of AB, is most nearly, M_C

(A) 110
(B) 125
(C) 138
(D) 155

(4) The shear force (kN) at the mid-point of AB is most nearly

(A) 42.5
(B) 50.0
(C) 67.5
(D) 70.0

Problem: (Cantilever Beams)

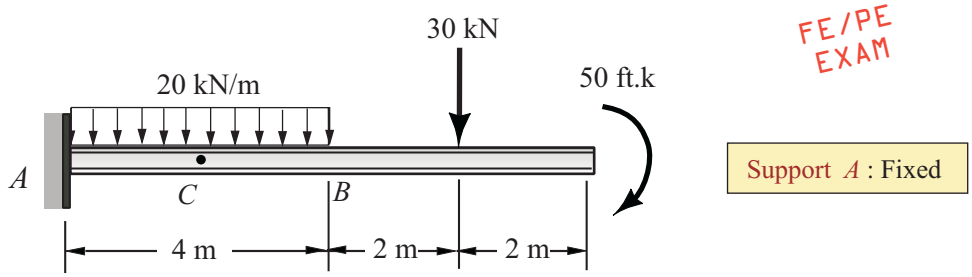

The cantilever beam is loaded as shown in the figure. Using the given loads and the support condition, answer the following questions:

(1) The vertical support reaction (kN) at the fixed support, A_y

(A) 140
(B) 125
(C) 110
(D) 100

(2) The bending moment (kN.m) at the fixed support, M_A

(A) 290
(B) 390
(C) 465
(D) 520

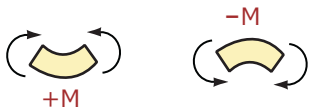

(3) The moment (kN.m) at C, the mid-point of AB, is most nearly, M_C

(A) 515
(B) 420
(C) 338
(D) 210

(4) The shear force (kN) at the mid-point of AB is most nearly

(A) 42.5
(B) 50.0
(C) 60.5
(D) 70.0

Problem: (Cantilever Beams)

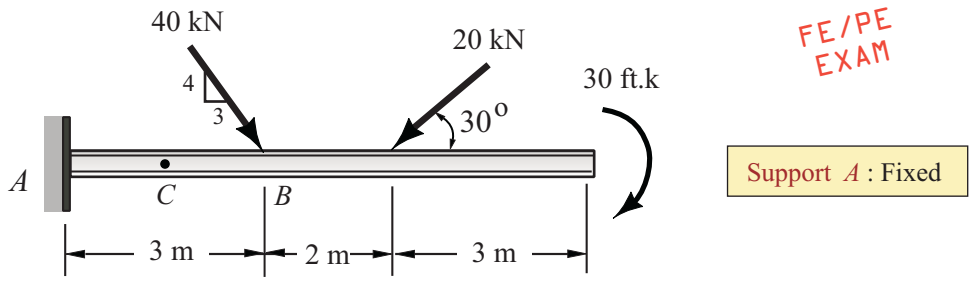

FE/PE EXAM

The cantilever beam is loaded as shown in the figure. Using the given loads and the support condition, answer the following questions:

(1) The horizontal and vertical support reactions (kN) at the fixed support, A_x , A_y

(A) 5.46 and 38
(B) 6.68 and 42
(C) 7.12 and 64
(D) 9.24 and 82

(2) The bending moment (kN.m) at the fixed support, M_A

(A) 416
(B) 314
(C) 225
(D) 176

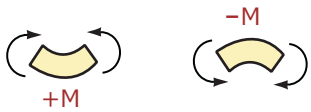

(3) The moment (kN.m) at C, the mid-point of *AB,* is most nearly, M_C

(A) 93
(B) 113
(C) 128
(D) 136

(4) The shear force (kN) at the mid-point of *AB* is most nearly

(A) 22.5
(B) 24.6
(C) 37.5
(D) 42.0

Problem: (Cantilever Beams)

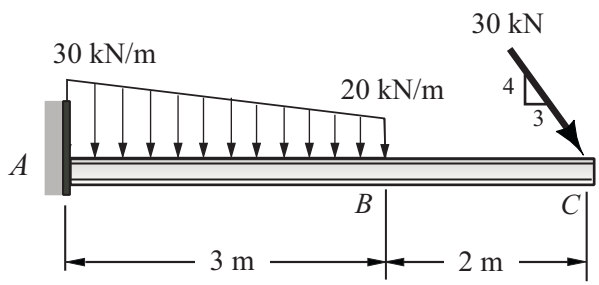

FE/PE EXAM

Support A : Fixed

A cantilever beam is loaded as shown in the figure. Using the given loads and the support condition, answer the following questions:

(1) The vertical support reaction (kN) at the fixed support, A_y

(A) 69
(B) 78
(C) 87
(D) 99

(2) The bending moment (kN.m) at the fixed support, M_A

(A) 125
(B) 185
(C) 205
(D) 225

(3) The horizontal support reaction (kN) at the fixed support, A_x

(A) 15.0
(B) 18.0
(C) 21.5
(D) 28.0

(4) The bending moment (kN.m) at the mid-point of *AB* is most nearly

(A) 94.5
(B) 108.4
(C) 122.5
(D) 148.7

Problem: (Cantilever Beams)

FE/PE EXAM

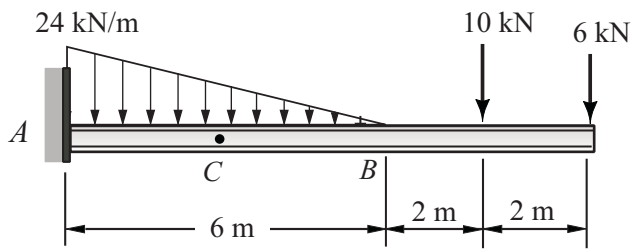

Support A : Fixed

A cantilever beam is loaded as shown in the figure. Using the given loads and support condition, answer the following questions:

(1) The vertical support reaction (kN) at the fixed support, A_y

(A) 88
(B) 105
(C) 113
(D) 128

(2) The bending moment (kN.m) at the fixed support, M_A

(A) 510
(B) 414
(C) 325
(D) 284

(3) The moment (kN.m) at C, the mid-point of *AB* is most nearly, M_C

(A) 90
(B) 110
(C) 122
(D) 134

(4) The shear force (kN) at the mid-point of *AB* is most nearly

(A) 21.5
(B) 34.0
(C) 47.5
(D) 52.5

STRENGTH OF MATERIALS

FLEXURE

Problem: (Bending)

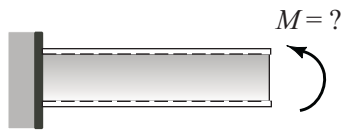

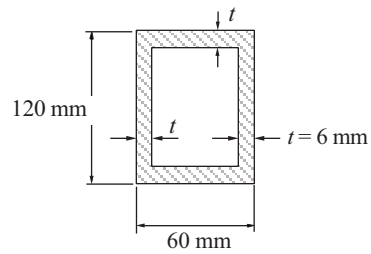

section

Yield stress: $\sigma_y = 150$ MPa
Ultimate strength: $\sigma_u = 300$ MPa
Factor of Safety: F.S. = 3.0

$E = 70$ GPa

A cantilever beam with a rectangular tube section is loaded as shown. Using the listed data, answer the following questions:

(1) the allowable stress (MPa) with a Factor of Safety of 3 is (σ_{all})

(A) 80
(B) 100
(C) 150
(D) 200

(2) the the bending moment (kN.m) for which the F.S. will be 3.0 (M)

(A) 4.0
(B) 5.0
(C) 6.0
(D) 8.5

(3) the radius of curvature in meters is most nearly (ρ)

(A) 35.0
(B) 42.0
(C) 54.5
(D) 60.6

(4) the maximum strain is most nearly (ε_{max})

(A) 1.25×10^{-3}
(B) 1.43×10^{-3}
(C) 1.56×10^{-3}
(D) 1.63×10^{-3}

Problem: (Centroid / MOI / Bending Stresses)

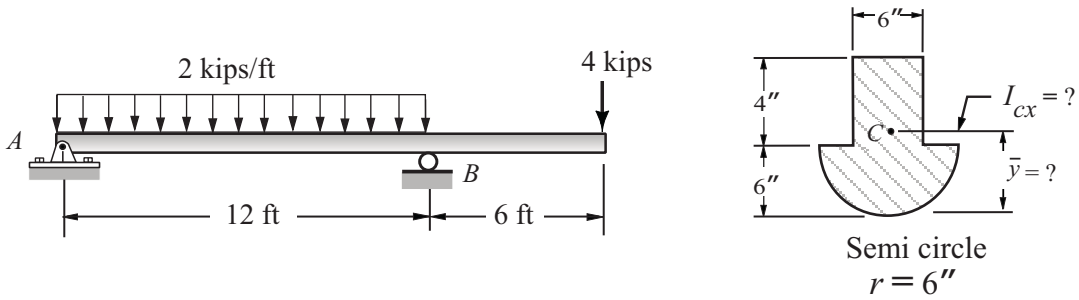

An overhanging beam is loaded as shown in the figure. Using the given cross-section, answer the following questions:

(1) the location (in.) of the centroid $\bar{y}$ is most nearly

(A) 3.90
(B) 4.80
(C) 5.50
(D) 6.00

(2) the moment of inertia about the horiz. centroidal axis I_{cx} (in^4)

(A) 820.05
(B) 714.48
(C) 605.14
(D) 523.07

(3) the maximum tensile stress (ksi) is most nearly

(A) 4.41
(B) 3.18
(C) 2.86
(D) 1.95

(4) the maximum compressive stress (ksi) is most nearly

(A) 1.67
(B) 2.98
(C) 3.20
(D) 4.36

Problem: (Centroid / Bending Stresses)

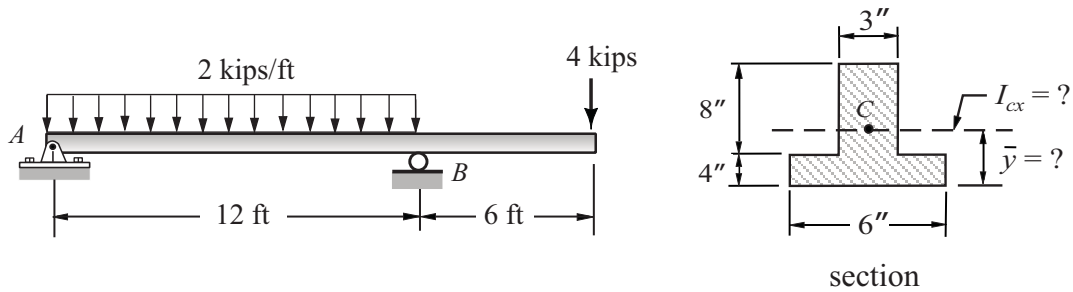

An overhanging beam is loaded as shown in the figure. Using the given cross-section, answer the following questions:

(1) the location (in.) of the centroid is most nearly ($\bar{y}$)

(A) 4.0
(B) 4.5
(C) 5.0
(D) 6.0

(2) the moment of inertia about the horiz. centroidal axis I_{cx} (in^4)

(A) 689
(B) 592
(C) 522
(D) 489

(3) the maximum tensile stress (ksi) is most nearly (σ_{tensile})

(A) 3.41
(B) 4.18
(C) 5.52
(D) 5.71

(4) the maximum compressive stress (ksi) is most nearly (σ_{comp})

(A) 6.40
(B) 5.55
(C) 4.20
(D) 3.55

Problem: (Centroid / MOI / V & M Diagrams / Bending Stresses)

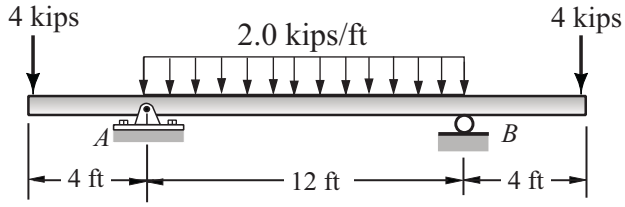

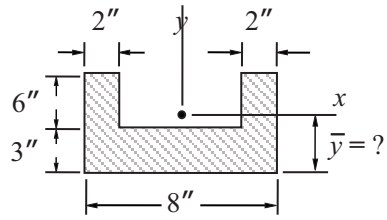

Section

An overhanging beam is loaded as shown in the figure. Using the given section properties, answer the following questions:

(1) the distance (in.) of the centroid of the cross-section, $\bar{y}$

(A) 3.50
(B) 3.75
(C) 4.00
(D) 4.25

(2) the moment of inertia (in^4.) about the horiz. centroidal axis, I_{cx}

(A) 415
(B) 375
(C) 333
(D) 296

(3) the maximum tensile stress (psi) in the cross-section is most nearly

(A) 4805
(B) 4120
(C) 3660
(D) 3030

(4) the maximum compressive stress (psi) in the cross-section is most nearly

(A) 3540
(B) 3780
(C) 4215
(D) 2695

Problem: (Centroid / MOI / V & M Diagrams / Bending Stresses)

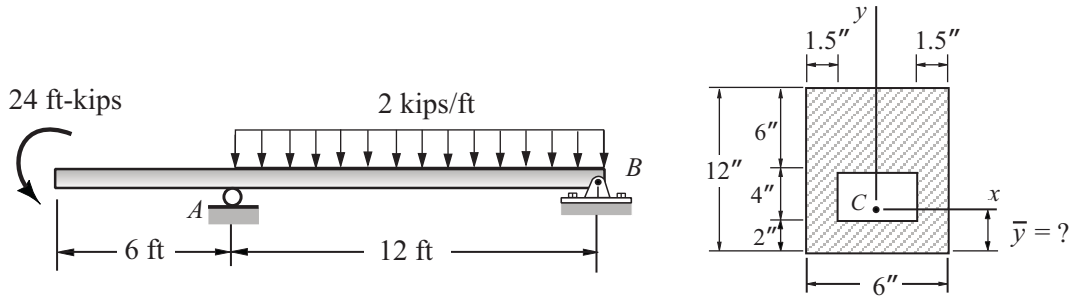

An overhanging beam is loaded as shown in the figure. Using the given cross-section, answer the following questions:

(1) the location (in.) of the centroid $\bar{y}$ is most nearly

(A) 4.05
(B) 4.50
(C) 5.65
(D) 6.40

(2) the moment of inertia about the horiz. centroidal axis I_{cx} (in^4)

(A) 889.45
(B) 790.40
(C) 622.15
(D) 589.30

(3) the maximum tensile stress (ksi) is most nearly

(A) 4.41
(B) 3.18
(C) 2.43
(D) 1.95

(4) the maximum compressive stress (ksi) is most nearly

(A) 1.67
(B) 2.33
(C) 3.20
(D) 4.36

MECHANICS OF SOLIDS

BEAM DESIGN

FE/PE EXAM

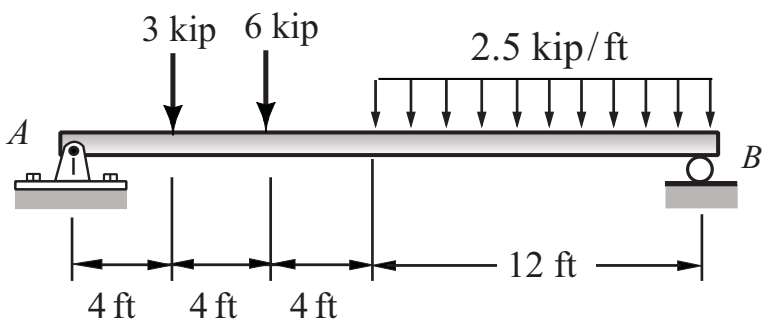

Support A : Pin
Support B : Roller

A36 STEEL

A simply supported beam is made of A36 steel and loaded as shown in the figure. Knowing that there is no inplane buckling and using the listed data, answer the following questions:

(1) the magnitude of the maximum bending moment (k-ft) is most nearly:

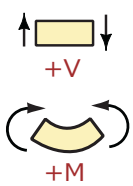

(A) 105
(B) 110
(C) 125
(D) 145

$$M_{\max} = ?$$

(2) Using the new NCEES Reference Manual (V.9.2) the most economical W-shape is most nearly:

(A) W 10 x 54
(B) W 12 x 40
(C) W 14 x 43
(D) W 16 x 40

FULL SOLUTION NEXT PAGE

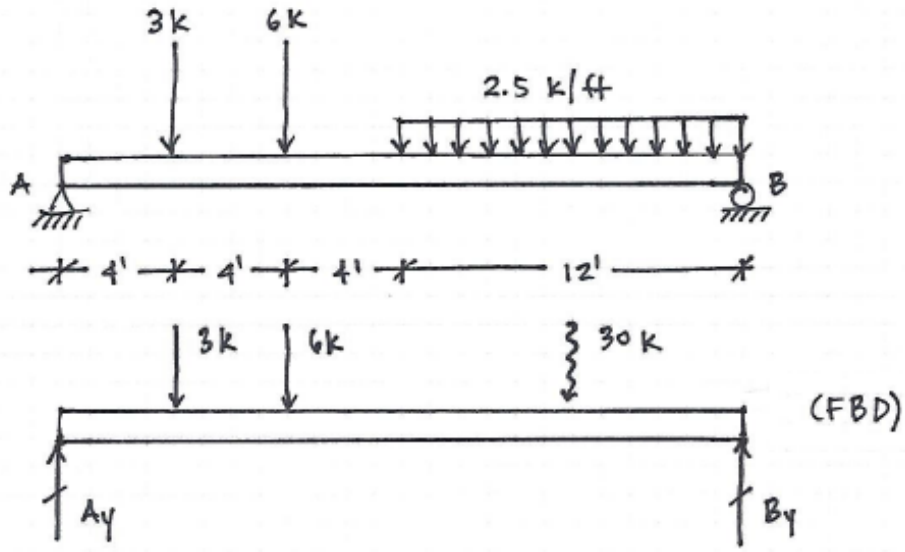

(a) DETERMINE THE SUPPORT REACTIONS.

$\circlearrowleft + \quad \Sigma M_B = 0$

$(30k)(6') + (6k)(16') + (3k)(20') - 24A_y = 0$

$180 + 96 + 60 - 24A_y = 0$

$24A_y = 336$

$\boxed{A_y = 14k}$

$\circlearrowright + \quad \Sigma M_A = 0$

$(3k)(4') + (6k)(8') + (30k)(18') - 24B_y = 0$

$12 + 48 + 540 - 24B_y = 0$

$24B_y = 600$

$\boxed{B_y = 25k}$

CHECK: $A_y + B_y \overset{?}{=} 3 + 6 + 30$

$14 + 25 \overset{?}{=} 39$

$39 = 39$ OK

(b) DRAW THE SHEAR FORCE DIAGRAM.
(c) DRAW THE MOMENT DIAGRAM.

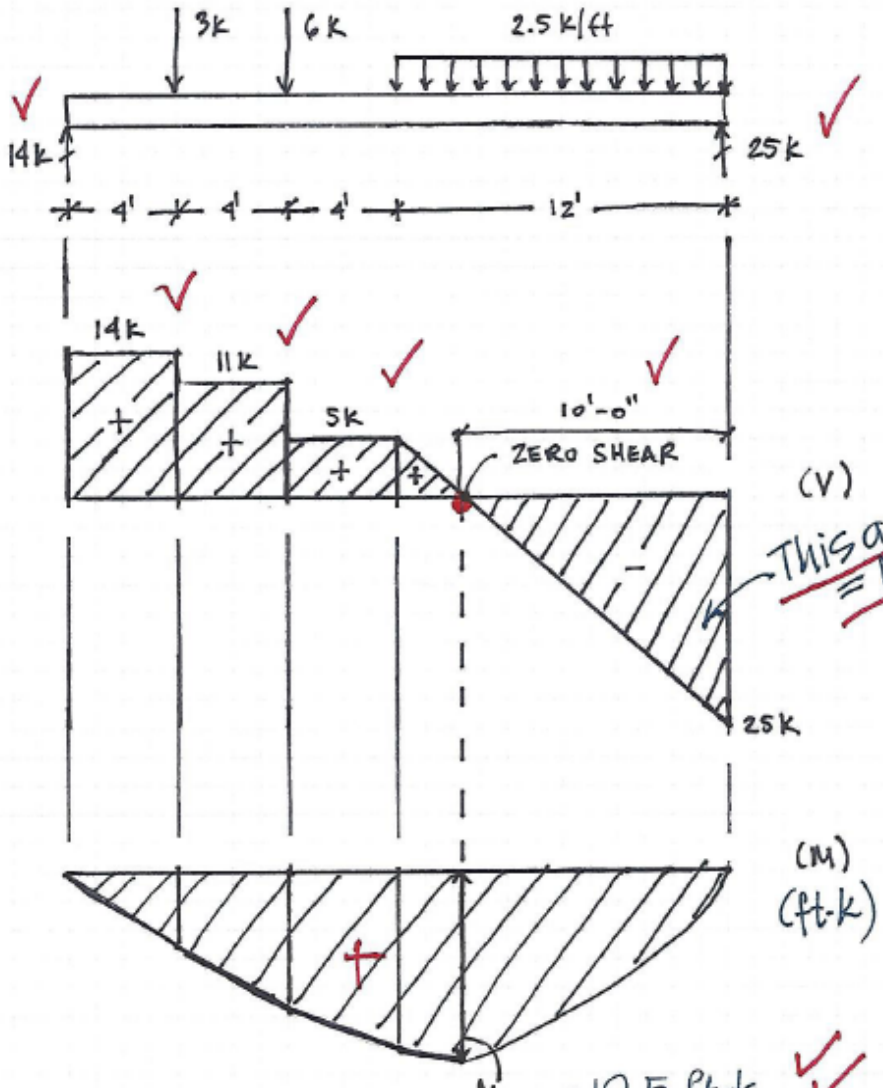

$M_{max} = \frac{1}{2}(10')(25k)$

$M_{max} = 125\ k\cdot ft$

$S = \frac{M_{max}}{f_{allow}}$

$S = \frac{(125k\cdot ft)(12\ in.)}{24\ k/in^2}$

$S = 62.5\ in^3$

SECTION MODULUS

(d) DESIGN THE BEAM.

→ W 16×40 (S = 64.7) ←
W 14×43 (S = 62.6)
W 12×53 (S = 70.6)
W 10×60 (S = 66.7)
W 10×54 (S = 60.0)

EXCELLENT SOLUTION!
Dr. Z

FUNDAMENTALS OF ENGINEERING

DOMAIN: MATHEMATICS

MATRICES & DETERMINANTS

NCEES-Reference Handbook / Pages 30-31

$$\mathbf{A} = \begin{bmatrix} 3 & 2 \\ 2 & -1 \end{bmatrix} \qquad \mathbf{B} = \begin{bmatrix} -2 & 3 & -1 \\ 4 & 1 & 3 \end{bmatrix}$$

Using the matrices given above, answer the following questions:

(1) the determinant of the matrix **A** is most nearly

(A) 5
(B) -3
(C) -7
(D) 4

(2) the matrix product of **A** and **B** is most nearly, **A*B**

(A) $A*B = \begin{bmatrix} -2 & 11 & 9 \\ -8 & -2 & 2 \end{bmatrix}$

(B) $A*B = \begin{bmatrix} -1 & 7 & -4 \\ 0 & -5 & -2 \end{bmatrix}$

(C) $A*B = \begin{bmatrix} 3 & 12 & 6 \\ -1 & 7 & 2 \end{bmatrix}$

(D) $A*B = \begin{bmatrix} 2 & 11 & 9 \\ -8 & 5 & -1 \end{bmatrix}$

Problem: (Matrix Algebra)

$$A = \begin{bmatrix} 3 & -3 & 2 \\ 2 & 5 & -3 \\ 3 & -1 & 1 \end{bmatrix}$$

Using the matrix given above, answer the following questions:

(1) the determinant of the above matrix is most nearly

(A) 4
(B) 5
(C) 6
(D) 8

(2) the inverse of matrix **A** is most nearly, (A^{-1})

(A) $$A^{-1} = \begin{bmatrix} 1/4 & 1/4 & -1/4 \\ 10/4 & 5/4 & 13/4 \\ -10/4 & -4/4 & 11/4 \end{bmatrix}$$

(B) $$A^{-1} = \begin{bmatrix} 2/3 & 1/3 & -1/6 \\ -11/3 & -7/3 & 13/3 \\ -17/3 & -8/3 & 32/3 \end{bmatrix}$$

(C) $$A^{-1} = \begin{bmatrix} 2/5 & 1/5 & 1/5 \\ 11/5 & 3/5 & 13/5 \\ -17/5 & -6/5 & 21/5 \end{bmatrix}$$

(D) $$A^{-1} = \begin{bmatrix} 2/5 & 1/5 & -1/5 \\ -11/5 & -3/5 & 13/5 \\ -17/5 & -6/5 & 21/5 \end{bmatrix}$$

Problem: (Matrix Algebra)

$$B = \begin{bmatrix} 1 & 2 & 0 \\ 2 & -5 & -2 \\ -1 & 3 & 1 \end{bmatrix}$$

A square matrix [B] is given above. Answer the following questions:

(1) the determinant of matrix [B] is most nearly, det [B]

(A) 1
(B) 2
(C) -3
(D) -1

(2) the inverse of matrix [B] is most nearly, (B^{-1})

(A) $$B^{-1} = \begin{bmatrix} 1 & 2 & 4 \\ 0 & 13 & 1 \\ 4 & -5 & 3 \end{bmatrix}$$

(B) $$B^{-1} = \begin{bmatrix} 10 & -2 & 7 \\ 0 & 13 & 9 \\ 2 & -8 & 2 \end{bmatrix}$$

(C) $$B^{-1} = \begin{bmatrix} 1 & -2 & -4 \\ 0 & -3 & -8 \\ 3 & -9 & 2 \end{bmatrix}$$

(D) $$B^{-1} = \begin{bmatrix} 1 & -2 & -4 \\ 0 & 1 & 2 \\ 1 & -5 & -9 \end{bmatrix}$$

IN NEXT THE NEWSLETTER
WE WILL SHOW YOU HOW
TO GET ANSWERS ONLY
IN 18 SECONDS !

FUNDAMENTALS OF ENGINEERING

DOMAIN: MATHEMATICS

MATRICES & DETERMINANTS

NCEES-Reference Handbook / Pages 30-31

$$\mathbf{A} = \begin{bmatrix} 2 & -3 \\ 1 & -1 \end{bmatrix} \qquad \mathbf{B} = \begin{bmatrix} 1 & 2 & 0 \\ 2 & -5 & -2 \end{bmatrix}$$

Using the matrices given above, answer the following questions:

(1) the determinant of the matrix **A** is most nearly

(A) 4
(B) -3
(C) -2
(D) 1

(2) the matrix product of **A** and **B** is most nearly, **A*B**

(A) $A*B = \begin{bmatrix} -4 & 12 & -10 \\ 2 & -5 & -2 \end{bmatrix}$

(B) $A*B = \begin{bmatrix} -1 & 12 & -4 \\ 0 & -5 & -2 \end{bmatrix}$

(C) $A*B = \begin{bmatrix} -4 & 19 & 6 \\ -1 & 7 & 2 \end{bmatrix}$

(D) $A*B = \begin{bmatrix} -2 & 11 & -20 \\ 2 & 13 & 7 \end{bmatrix}$

IMPORTANT FORMULAS

Problem: (Rectangle)

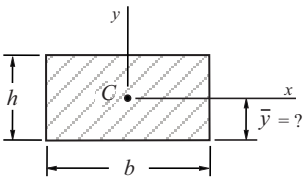

C: Centroid
Origin of axes at *C*

(a) Area of the rectangle (A = ?)
(b) Centroid of the rectangle ($\bar{y}$ = ?)
(c) Moment of inertia about the x axis (I_{cx} = ?)
(d) Moment of inertia about the y axis (I_{cy} = ?)

Formulas:

$$A = bh$$

$$\bar{y} = \frac{h}{2}$$

$$I_{cx} = \frac{b\,h^3}{12}$$

$$I_{cy} = \frac{h\,b^3}{12}$$

Example:

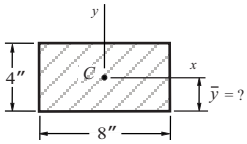

$$A = bh = (8)(4) = 32 \text{ in.}^2$$

$$\bar{y} = \frac{h}{2} = \frac{4}{2} = 2 \text{ in.}$$

$$I_{cx} = \frac{b\,h^3}{12} = \frac{(8)(4)^3}{12} = 42.67 \text{ in.}^4$$

$$I_{cy} = \frac{h\,b^3}{12} = \frac{(4)(8)^3}{12} = 170.67 \text{ in.}^4$$

Problem: (Triangular Area)

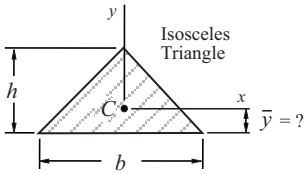

C : Centroid
x, y : Centroidal axes

(a) Area of the triangle (A = ?)
(b) Centroid of the triangle ($\bar{y}$ = ?)
(c) Moment of inertia about the x axis (I_{cx} = ?)
(d) Moment of inertia about the y axis (I_{cy} = ?)

Formulas:

$$A = \frac{bh}{2}$$

$$\bar{y} = \frac{h}{3}$$

$$I_{cx} = \frac{b\,h^3}{36}$$

$$I_{cy} = \frac{h\,b^3}{48}$$

Example:

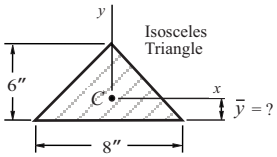

$$A = \frac{bh}{2} = \frac{(8)(6)}{2} = 24 \text{ in.}^2$$

$$\bar{y} = \frac{h}{3} = \frac{6}{3} = 2 \text{ in.}$$

$$I_{cx} = \frac{b\,h^3}{36} = \frac{(8)(6)^3}{36} = 48.00 \text{ in.}^4$$

$$I_{cy} = \frac{h\,b^3}{48} = \frac{(6)(8)^3}{48} = 64.00 \text{ in.}^4$$

Problem: (Half Circle)

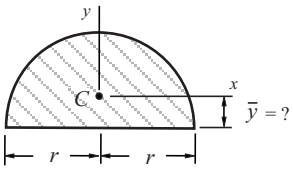

(a) Area of the semicircle (A = ?)
(b) Centroid of the semicircle ($\bar{y}$ = ?)
(c) Moment of inertia about the x axis (I_{cx} = ?)
(d) Moment of inertia about the y axis (I_{cy} = ?)

Solution:

$$A = \frac{\pi r^2}{2} \qquad \bar{y} = \frac{4r}{3\pi}$$

$$I_{cx} = \frac{r^4}{72\pi} \cdot (9\pi^2 - 64)$$

$$I_{cx} \approx 0.109757 \cdot r^4$$

$$I_{cy} = \frac{\pi r^4}{8}$$

Problem: (Trapezoidal Area)

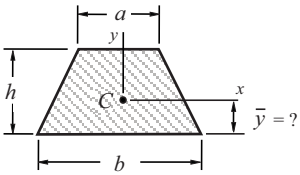

C : Centroid
x, y : Centroidal axes

Isosceles
Trapezoid

(a) Area of the trapezoid (A = ?)
(b) Centroid of the trapezoid ($\bar{y}$ = ?)
(c) Moment of inertia about the x axis (I_{cx} = ?)
(d) Moment of inertia about the y axis (I_{cy} = ?)

Formulas

$$A = \frac{h}{2}(a+b) \qquad \bar{y} = \frac{h}{3}\frac{(2a+b)}{(a+b)}$$

$$I_{cx} = \frac{h^3}{36} \cdot \frac{(a^2 + 4ab + b^2)}{(a+b)}$$

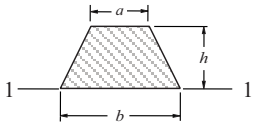

$$I_{cy} = \frac{h\,(a+b)\,(a^2+b^2)}{48}$$

$$I_{1\text{-}1} = \frac{h^3\,(3a+b)}{12}$$

Problem: (Parallel Axis Theorem)

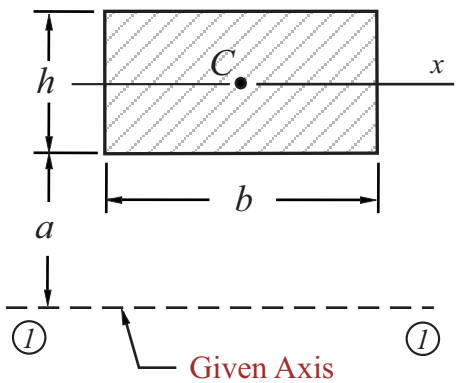

PAT | **Parallel Axis Theorem**

(a) Moment of inertia about the x axis ($I_{cx} = ?$)
(b) Moment of inertia about the (1-1) axis ($I_{1\text{-}1} = ?$)

Formulas:

$$\boxed{I_{cx} = \frac{b\,h^3}{12}}$$

$$\boxed{I_{1\text{-}1} = I_{cx} + A \cdot d^2}$$ **PAT**

I_{cx} = Moment of inertia about the centroidal x axis
$I_{1\text{-}1}$ = Moment of inertia about axis (1-1)
A = Area ($A = b.h$)
d = Distance from the centroid to the axis (1-1)

$$\boxed{d = a + h/2}$$

Example:

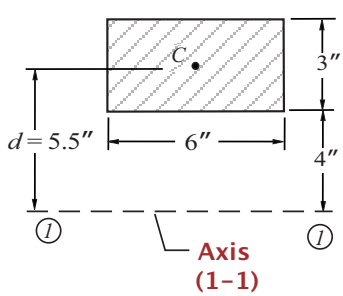

$$I_{cx} = \frac{b\,h^3}{12} = \frac{(6)(3)^3}{12} = 13.50 \text{ in.}^4$$

$$A = bh = (6)(3) = 18 \text{ in.}^2$$

$$d = 4 + \tfrac{3}{2} = 5.5 \text{ in.}$$

$$I_{1\text{-}1} = I_{cx} + A.d^2 = 13.50 + (18)(5.5)^2 = 558 \text{ in.}^4$$

$$\boxed{I_{1\text{-}1} = 558 \text{ in.}^4}$$

Problem: (Deflections)

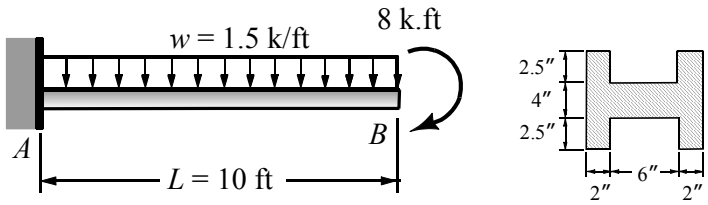

section

FE EXAM

$E = 29 \times 10^6$ psi

A cantilever beam is loaded as shown. The beam weight is included in the uniform load. Using the given cross-section and the modulus of elasticity answer the following questions:

(1) the max. deflection (in.) of the beam is most nearly (δ_B)

(A) 0.0367
(B) 0.4929
(C) 0.6525
(D) 1.4456

(2) the slope (rad.) at the free end of the beam is most nearly (θ_B)

(A) 0.06458
(B) 0.03782
(C) 0.00415
(D) 0.00596

(3) the moment at the support is most nearly (M_A)

(A) 75
(B) 83
(C) 90
(D) 105

Problem: (Deflections)

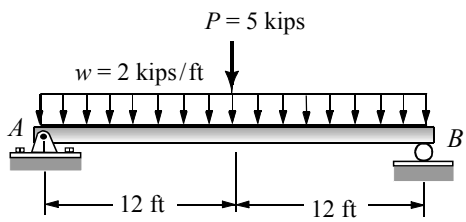

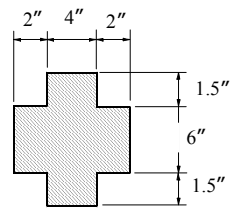

section

$E = 29 \times 10^6$ psi

FE EXAM

A simple beam is loaded as shown. The beam weight is included in the uniform load. Using the given cross-section and the modulus of elasticity answer the following questions:

(1) the max. deflection (in.) of the beam is most nearly (δ_{max})

(A) 0.75
(B) 1.00
(C) 1.91
(D) 2.50

(2) the slope (radians) at support A is most nearly (θ_A)

(A) 1.226
(B) 0.425
(C) 0.055
(D) 0.021

(3) the maximum moment (k.ft) in the beam is most nearly ($M_{\max}$)

(A) 174
(B) 250
(C) 285
(D) 316

Problem: (Beam Deflections)

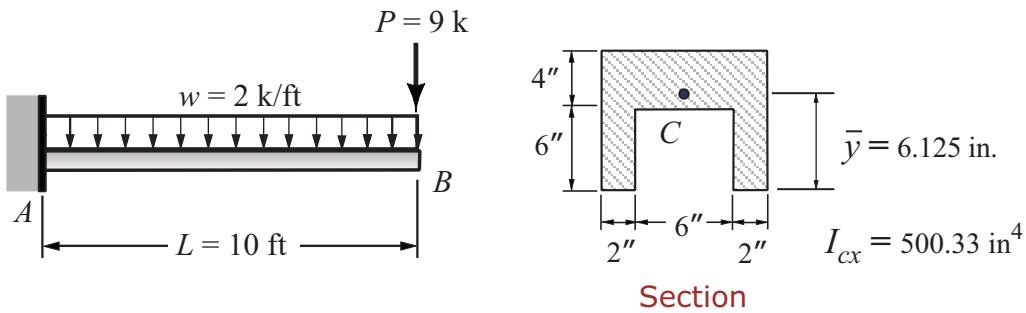

$E = 29 \times 10^6$ psi

A cantilever beam is loaded as shown. The beam weight is included in the uniform load. Using the listed data and the modulus of elasticity answer the following questions:

(1) the max. deflection (in.) of the beam is most nearly (δ_B)

(A) 0.5426
(B) 0.6550
(C) 0.0877
(D) 0.0915

(2) the max. slope (rad.) at the free end is most nearly (θ_B)

(A) 0.02153
(B) 0.01554
(C) 0.00777
(D) 0.00655

(3) the bending moment (k.ft) at the support is most nearly (M_A)

(A) 155
(B) 182
(C) 190
(D) 220

Problem: (Deflections)

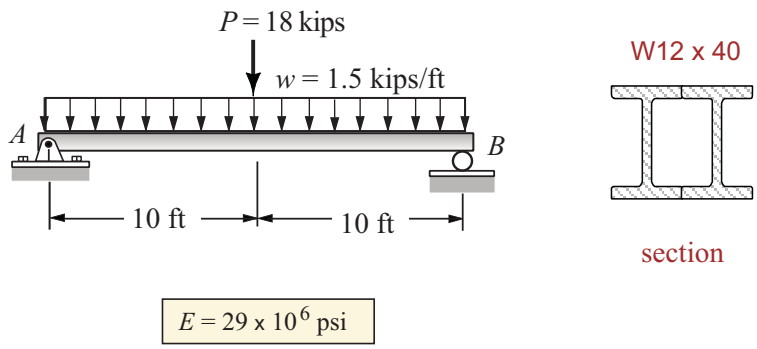

$E = 29 \times 10^6$ psi

A composite beam is made of two W 12 x 40 welded together. The beam weight is included in the uniform load. Using the given beam dimensions and loads answer the following questions:

(1) the max. moment (ft.kips) in the beam is most nearly

(A) 126
(B) 165
(C) 225
(D) 300

(2) the moment of inertia (in.^{4}) about the horizontal centroidal axis is most nearly (I_{cx})

(A) 307
(B) 515
(C) 614
(D) 720

(3) the max. deflection (in.) of the beam is most nearly

(A) 0.245
(B) 0.363
(C) 0.478
(D) 0.594

(4) the slope (radians) at the left support is most nearly

(A) 0.00985
(B) 0.00768
(C) 0.00643
(D) 0.02250

SHEAR FORCE AND MOMENT DIAGRAMS

1

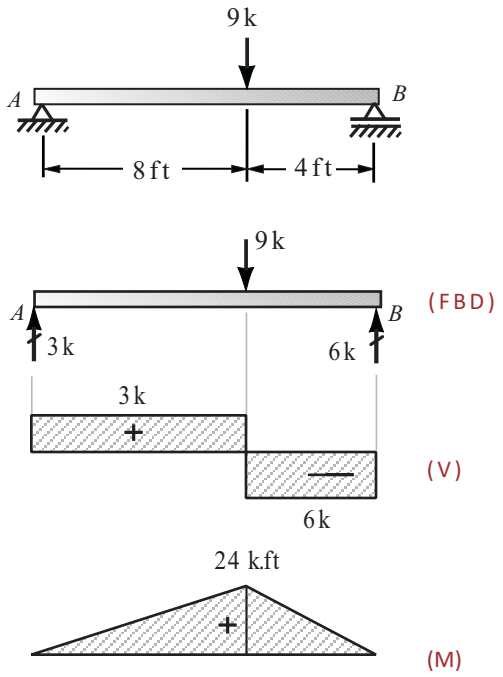

2

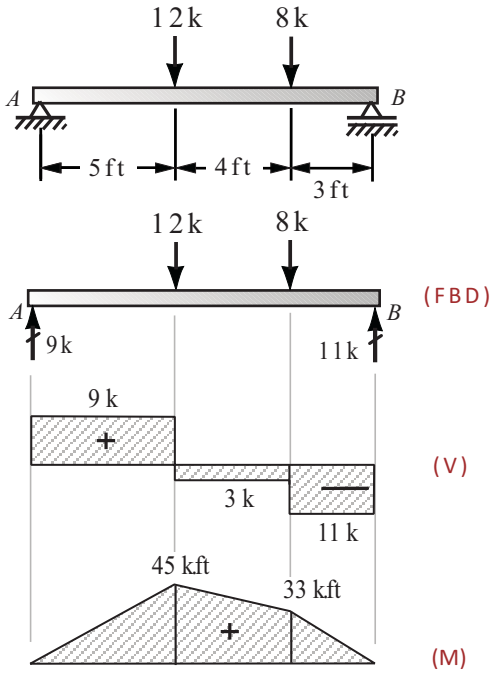

3

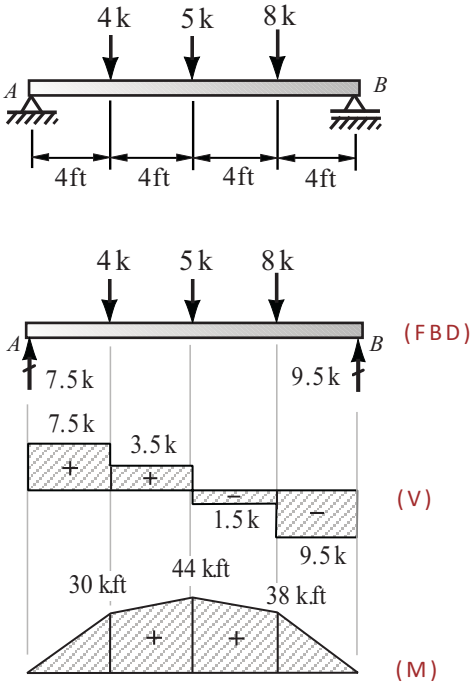

4

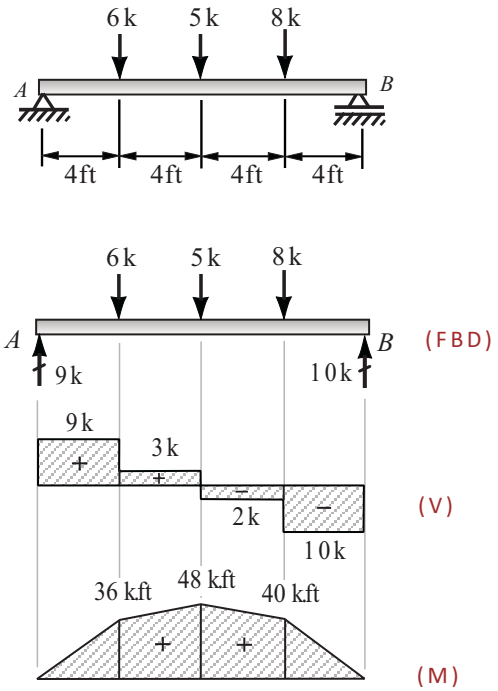

SHEAR AND MOMENT DIAGRAMS

5

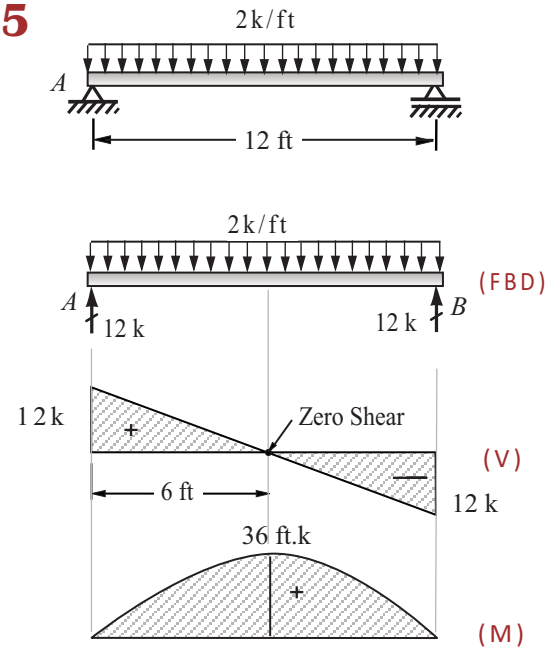

6

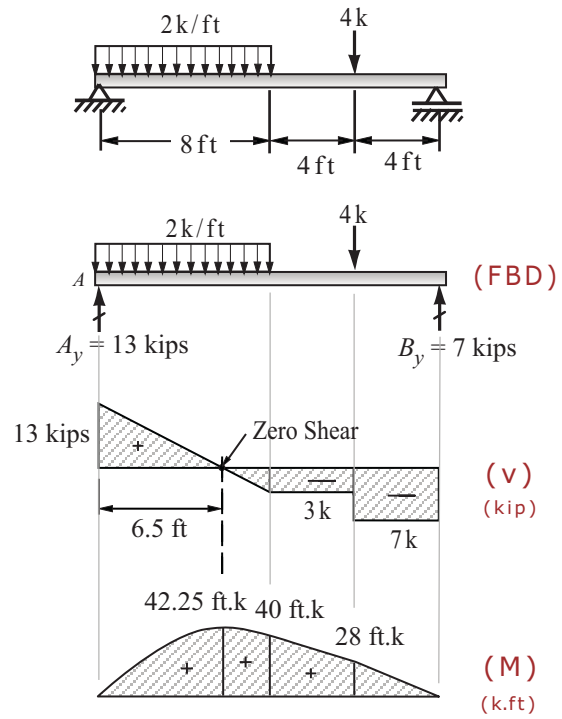

7

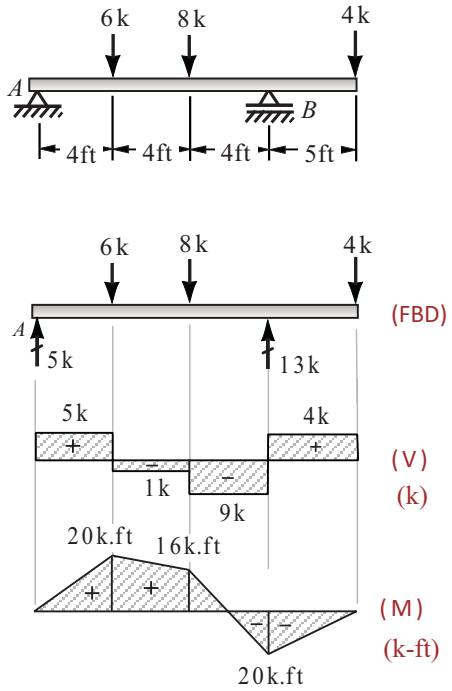

8

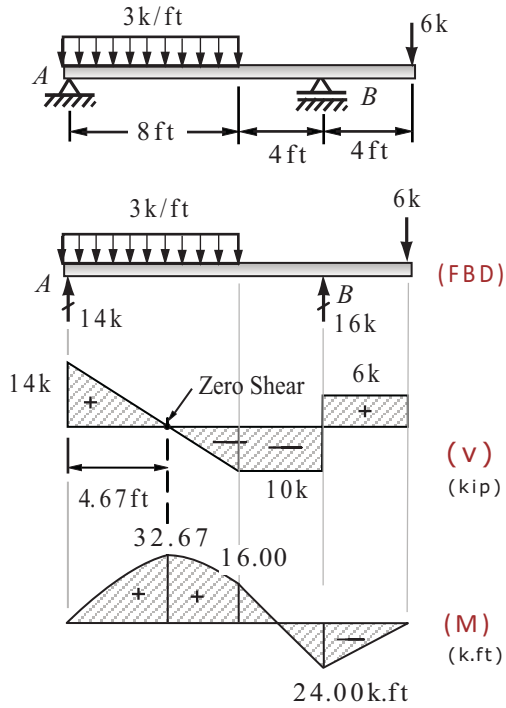

SHEAR AND MOMENT DIAGRAMS

9

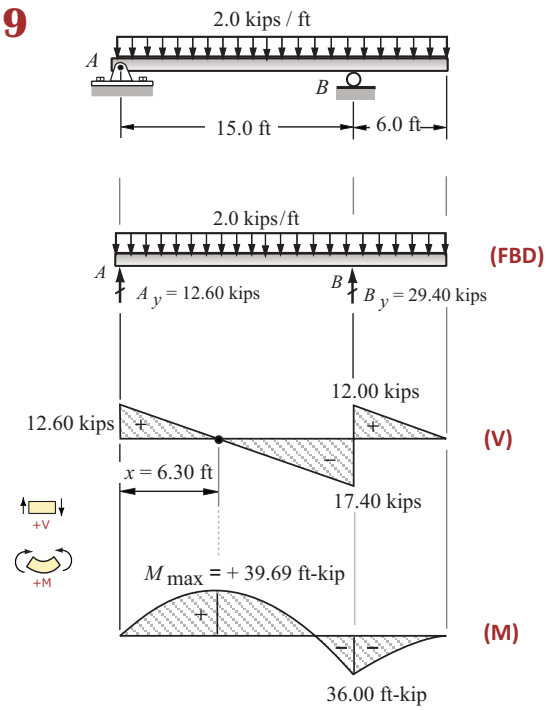

10

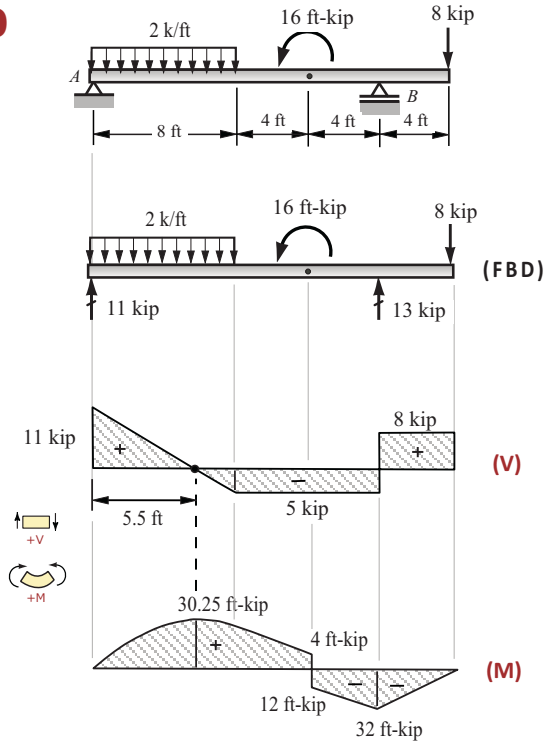

11

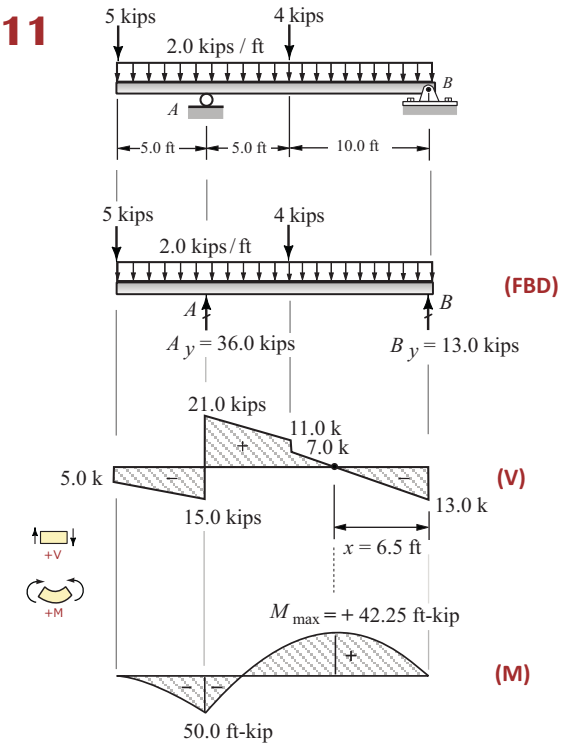

12

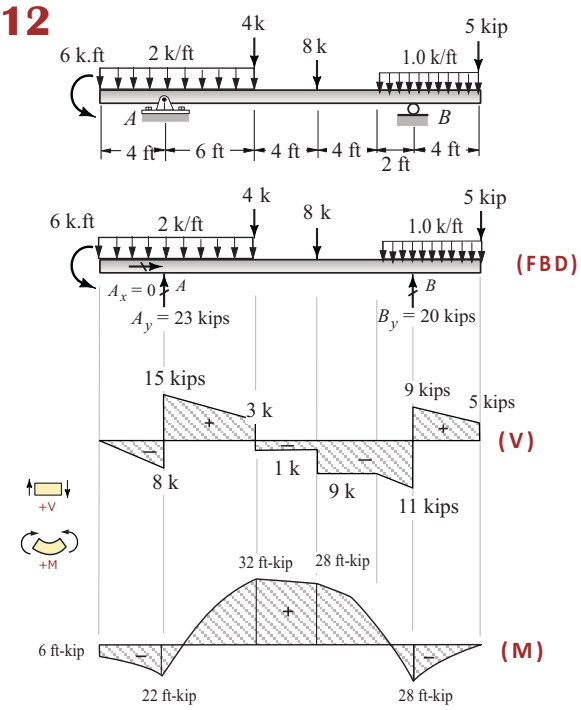

Shear Force and Bending Moment Diagrams

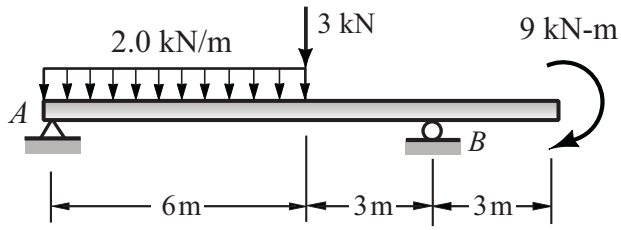

FE/PE EXAM

Support A : Hinge
Support B : Roller

The **shear force** diagram of this beam is most nearly:

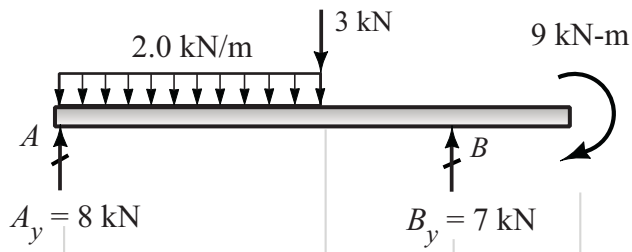

(FBD)

(A)

(B)

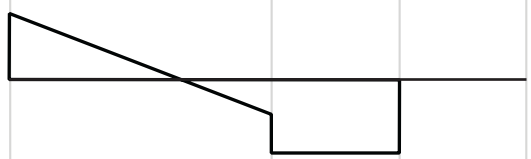

(C)

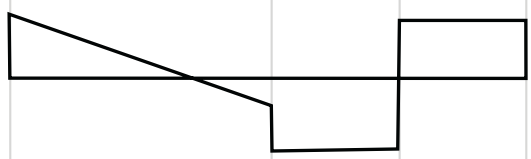

(D)

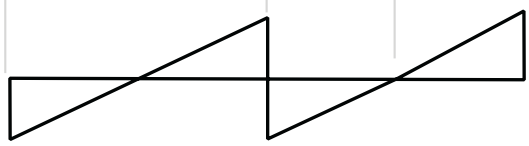

SHEAR FORCE & BENDING MOMENT DIAGRAMS

FE EXAM

1

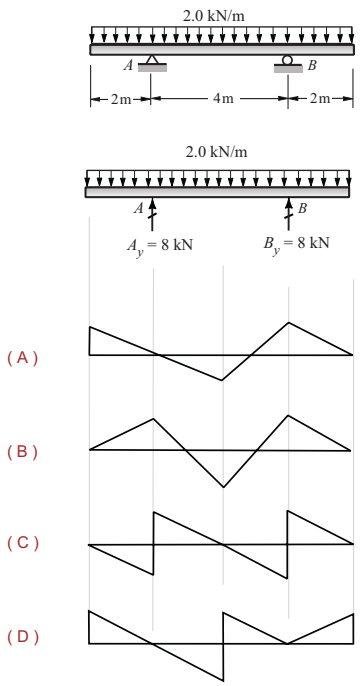

2

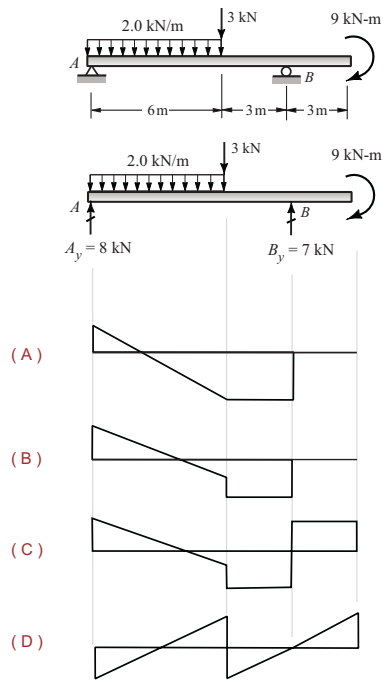

3

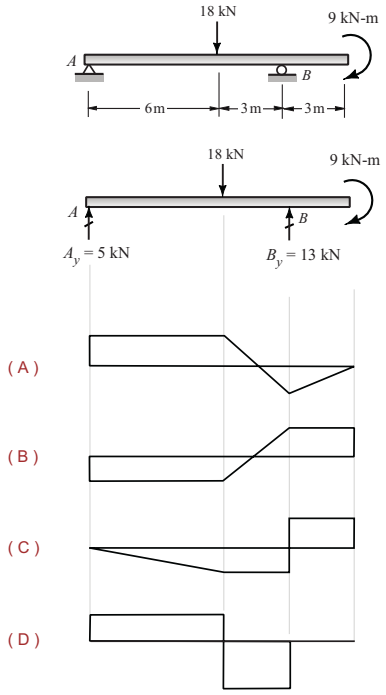

4

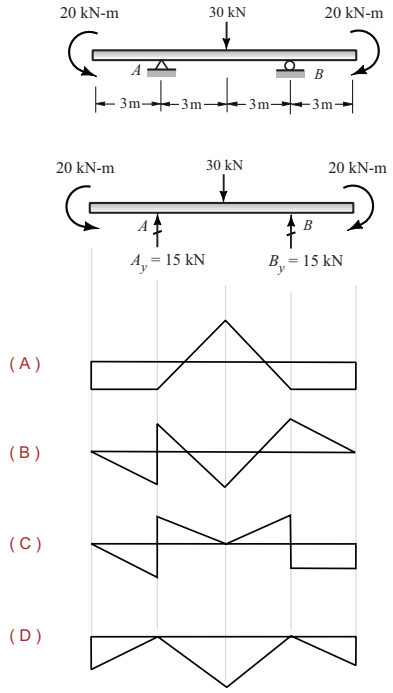

Shear Force and Moment Diagrams

FE EXAM

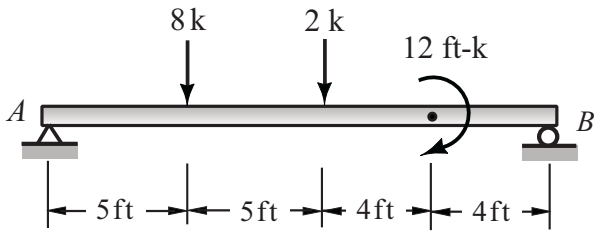

The shear force diagram of the beam is most nearly:

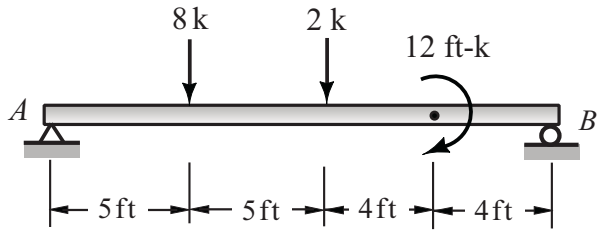

(A)

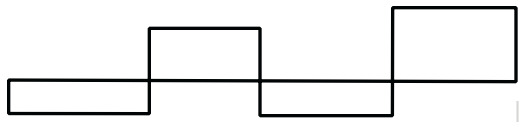

(B)

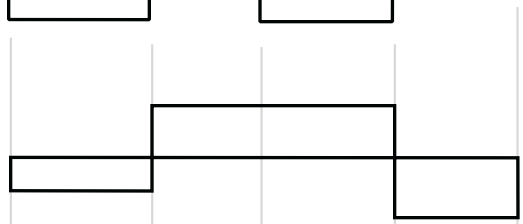

(C)

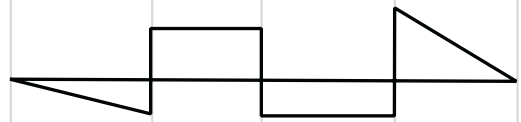

(D)

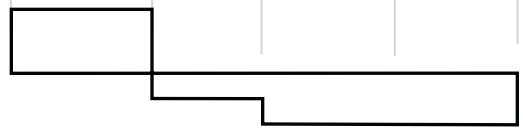

Problem: Shear Force and Moment Diagrams

FE EXAM

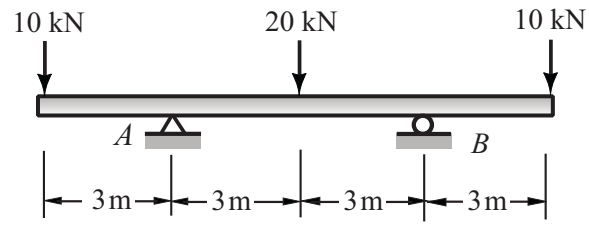

The moment diagram of this beam is most nearly:

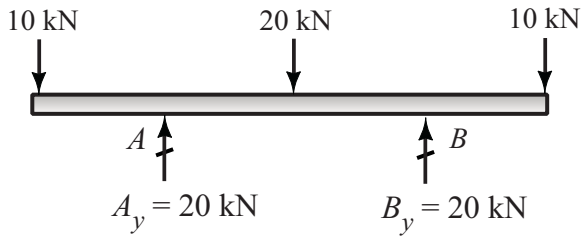

(FBD)

(A)

(B)

(C)

(D)

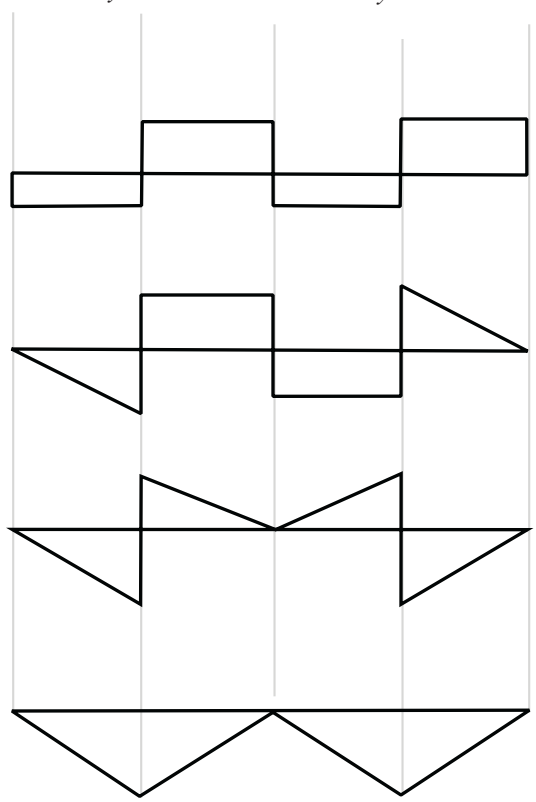

FUNDAMENTALS OF ENGINEERING

MECHANICS OF SOLIDS

Internal Forces in Determinate Frames

Problem:

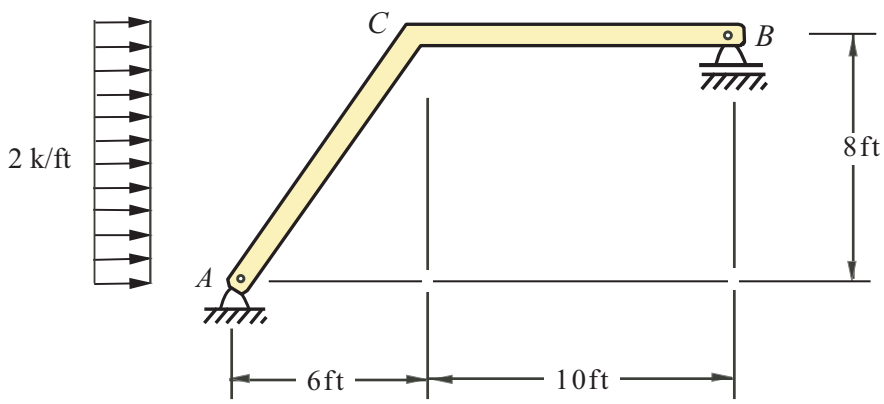

Support A : Pin
Support B : Roller

The dimensions, loading and support conditions of a determinate frame are given as shown in the figure:

(1) the magnitude of the *support reaction* (kips) at point *B*

(A) 8.0
(B) 6.4
(C) 5.5
(D) 4.0

(2) the magnitude of the *axial force* (kips) at point *A*

(A) 18.4
(B) 14.6
(C) 12.8
(D) 10.6

(3) the magnitude of the *shear force* (kips) at point *A* is most nearly:

(A) 8.6
(B) 10.4
(C) 12.8
(D) 16.5

ANSWERS

Solution by Dr. Vagelis Plevris

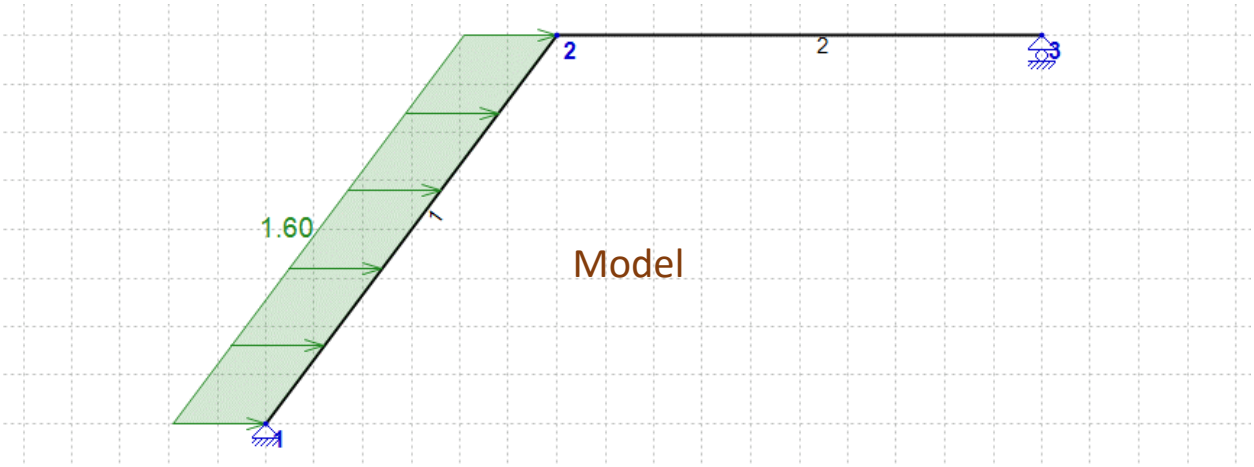

Model Equilibrium

ΣFX= 0.00
ΣFY= 0.00
ΣM = 0.00

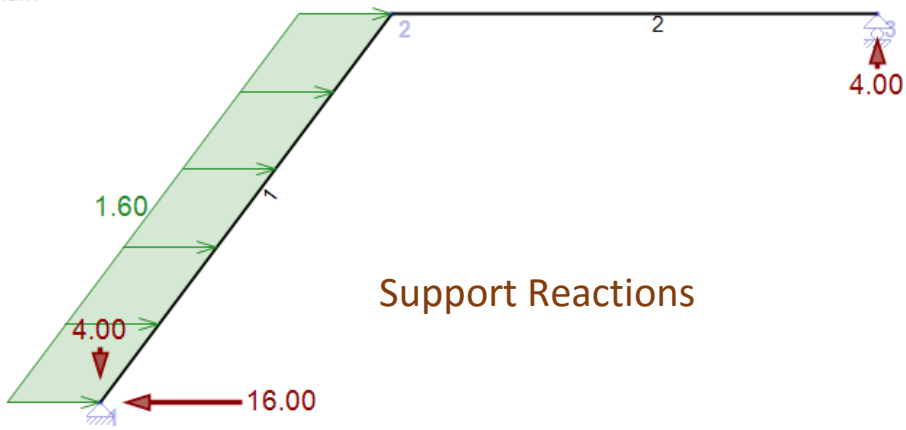

Answers:

(1) D (4.0)

(2) C (12.8)

(3) B (10.4)

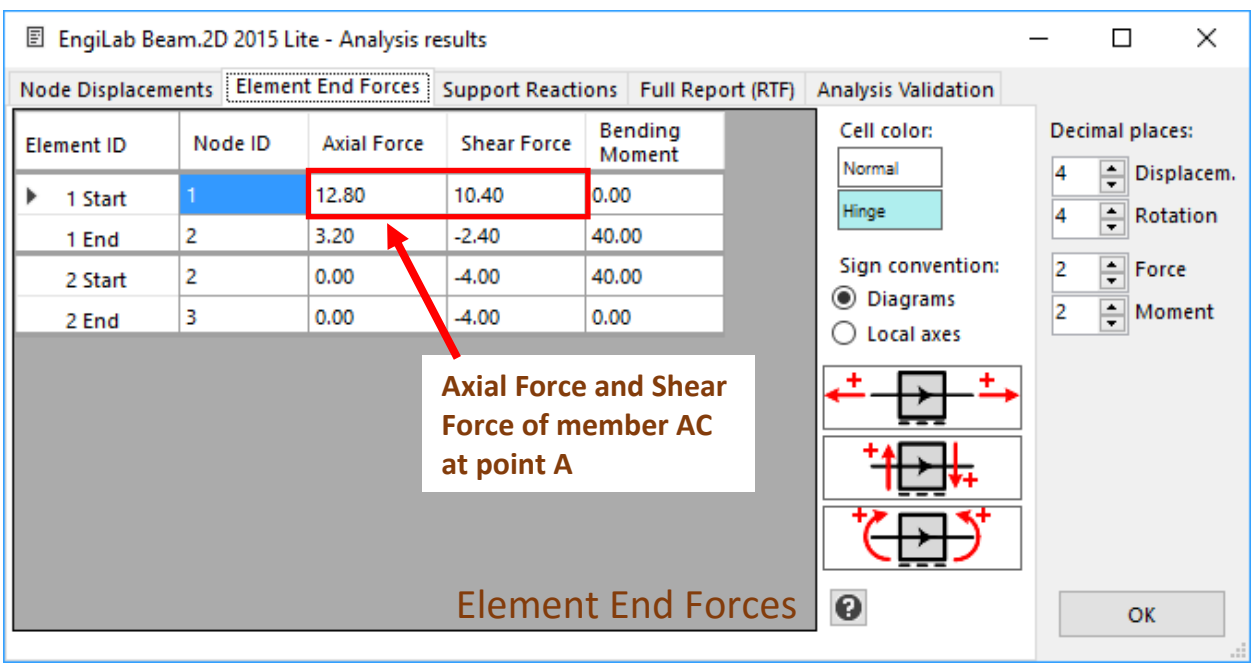

Element ID	Node ID	Axial Force	Shear Force	Bending Moment
1 Start	1	12.80	10.40	0.00
1 End	2	3.20	-2.40	40.00
2 Start	2	0.00	-4.00	40.00
2 End	3	0.00	-4.00	0.00

Software BEAM.2D by ENGILAB

www.engilab.com

FUNDAMENTALS OF ENGINEERING

MECHANICS OF SOLIDS

Internal Forces in Determinate Frames

Problem:

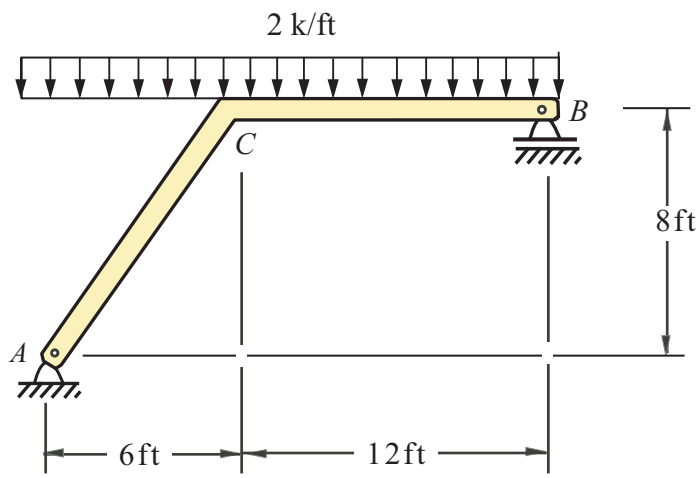

Support A : Pin
Support B : Roller

The dimensions, loading and support conditions of a determinate frame are given as shown in the figure:

(1) the magnitude of the *support reaction* (kips) at point *B*

(A) 24
(B) 18
(C) 14
(D) 12

(2) the magnitude of the *axial force* (kips) at point *A*

(A) 16.4
(B) 14.4
(C) 12.8
(D) 10.6

(3) the magnitude of the *max. bending moment* (ft-kips) in member *CB* is most nearly:

(A) 68.6
(B) 72.4
(C) 81.0
(D) 96.5

ANSWERS

Solution by Dr. Vagelis Plevris

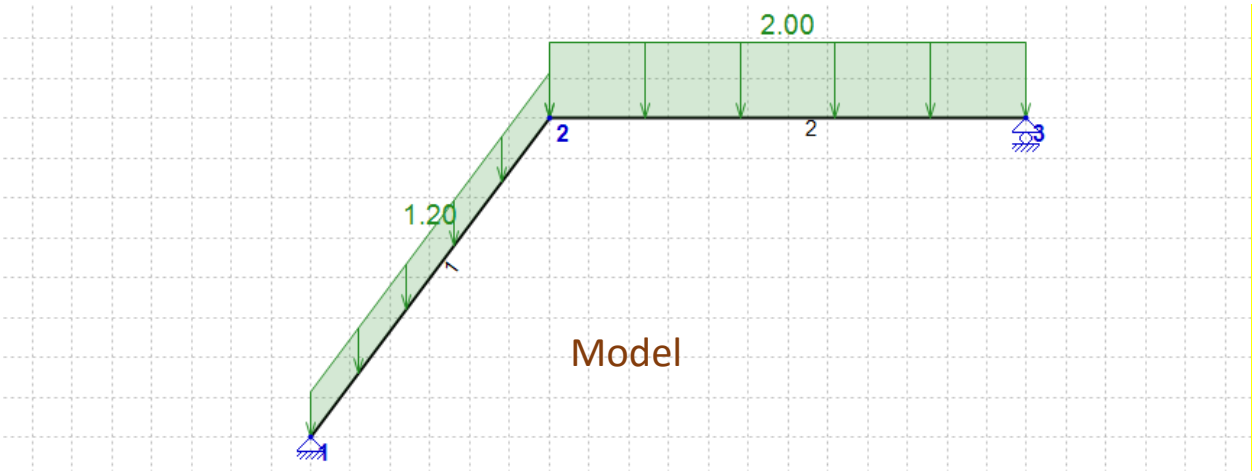

Model

Model Equilibrium

ΣFX= 0.00
ΣFY= 0.00
ΣM = 0.00

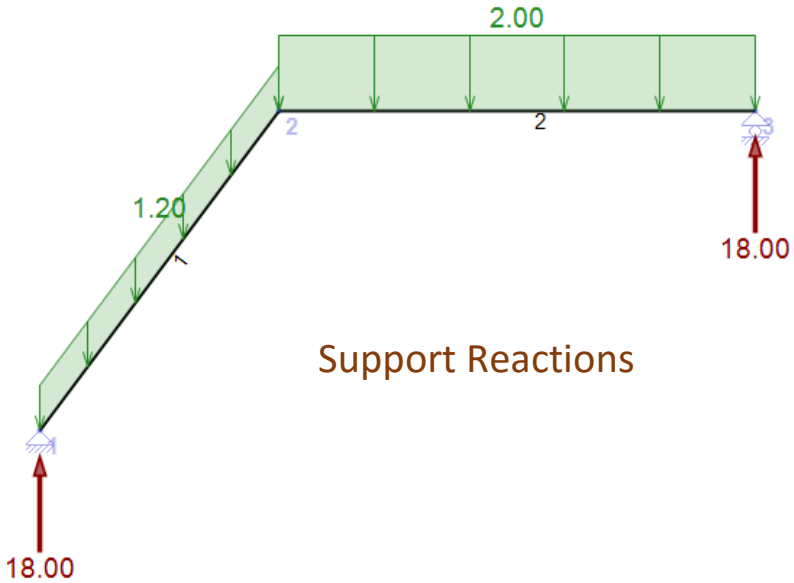

Support Reactions

Answers:

(1) B (18)

(2) B (14.4)

(3) C (81.0)

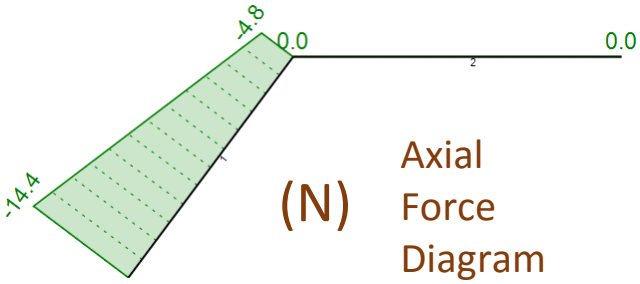

(N) Axial Force Diagram

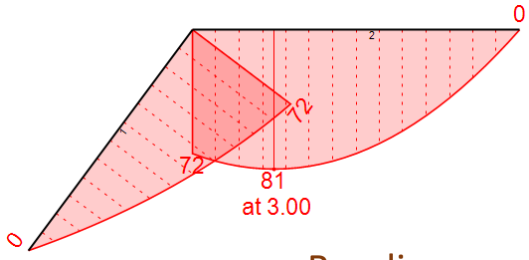

(M) Bending Moment Diagram

FR-256
VPLEVRIS
SPRING 2016

Software BEAM.2D by ENGILAB

www.engilab.com

FUNDAMENTALS OF ENGINEERING

MECHANICS OF SOLIDS

Shear Force & Bending Moment Diagrams

Problem:

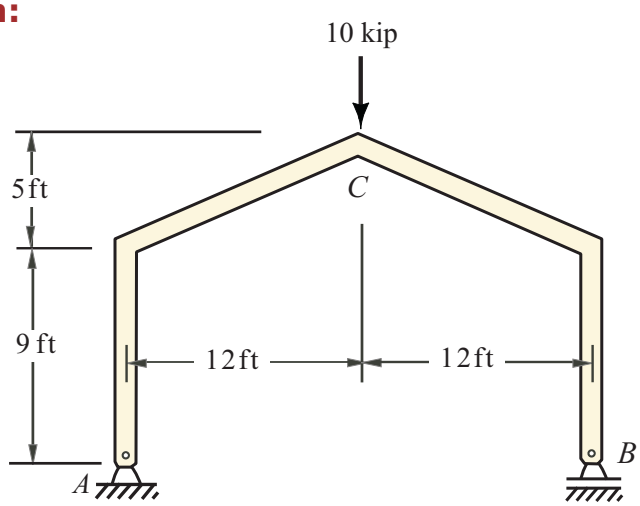

Support A : Pin
Support B : Roller

The dimensions and support conditions of a determinate frame are given as shown. Assuming that the vertical load P=10 kip is applied at C, answer the following questions:

(1) the *bending moment diagram* of this frame is composed of:

(A) Two triangles
(B) Two rectangles
(C) One triangle and two rectangles
(D) One rectangle and one triangle

(2) the *shear force diagram* of this frame is composed of:

(A) Two triangles
(B) Two rectangles
(C) One triangle and two rectangles
(D) One rectangle and one triangle

ANSWERS

Solution by Dr. Vagelis Plevris

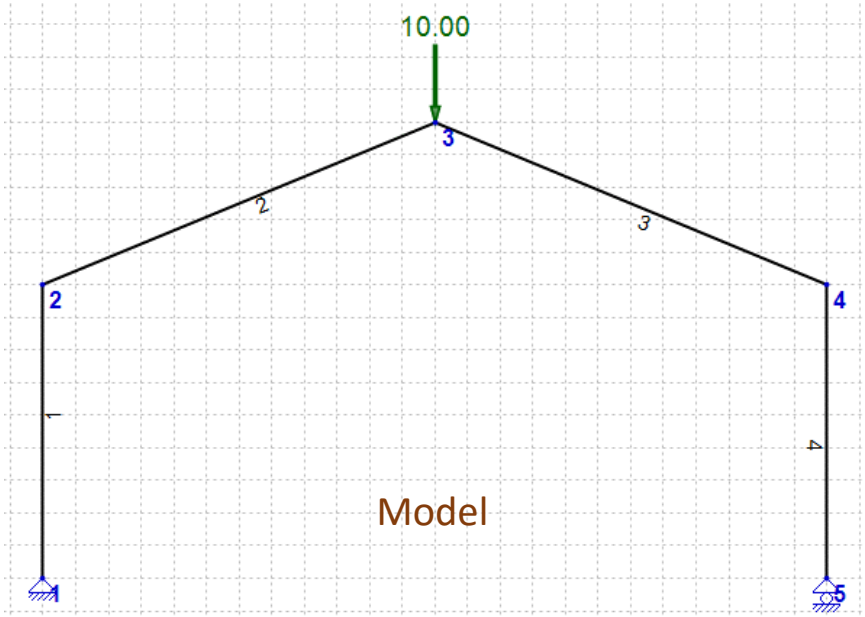

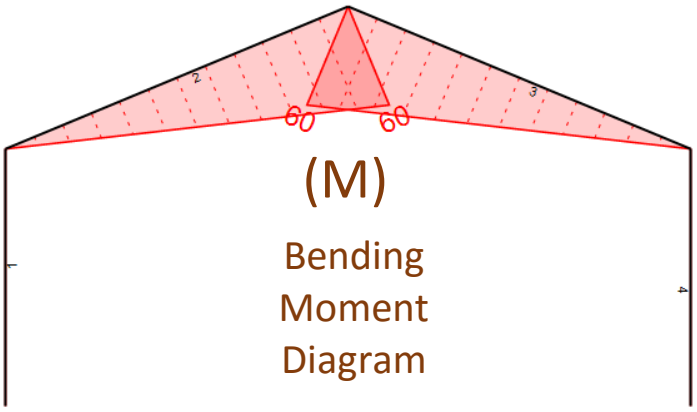

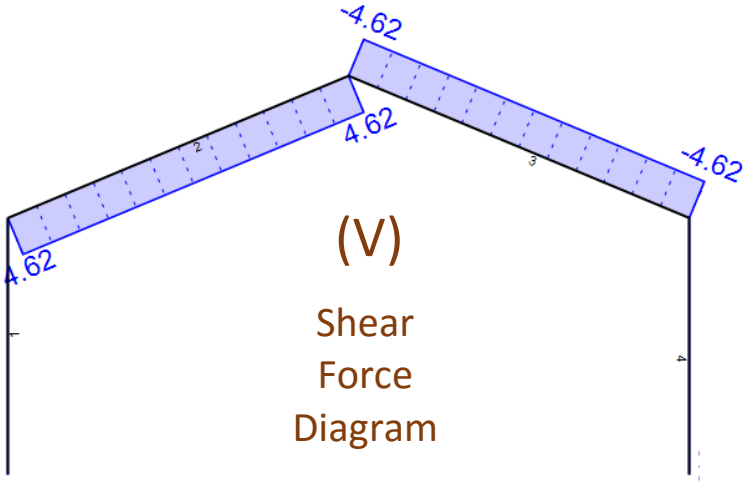

Answers:

(1) A (Two triangles)

(2) B (Two rectangles)

FR-284
VPLEVRIS
SPRING 2016

Software BEAM.2D by ENGILAB

www.engilab.com

FUNDAMENTALS OF ENGINEERING

MECHANICS OF SOLIDS

Internal Forces in Determinate Frames

Problem:

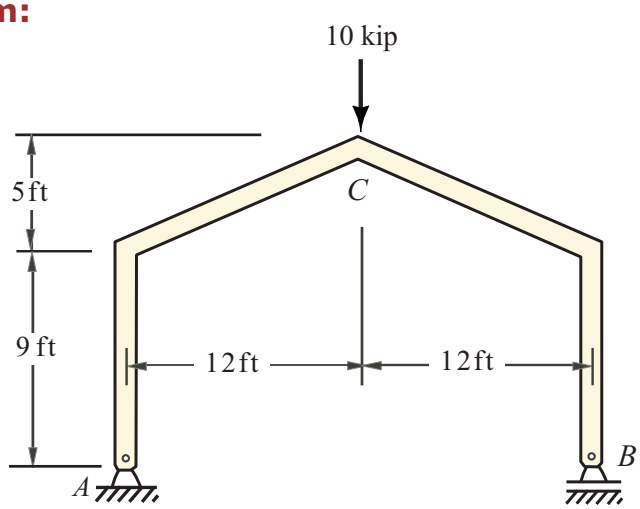

Support A : Pin
Support B : Roller

The dimensions and support conditions of a determinate frame are given as shown. Assuming that the vertical load P=10 kip is applied at C, answer the following questions:

(1) the magnitude of the *bending moment* (ft-kips) at point C is most nearly:

(A) 25
(B) 35
(C) 50
(D) 60

(2) the magnitude of the *shear force* (kips) in the inclined members is most nearly:

(A) 3.4
(B) 4.6
(C) 5.8
(D) 6.6

ANSWERS

Solution by Dr. Vagelis Plevris

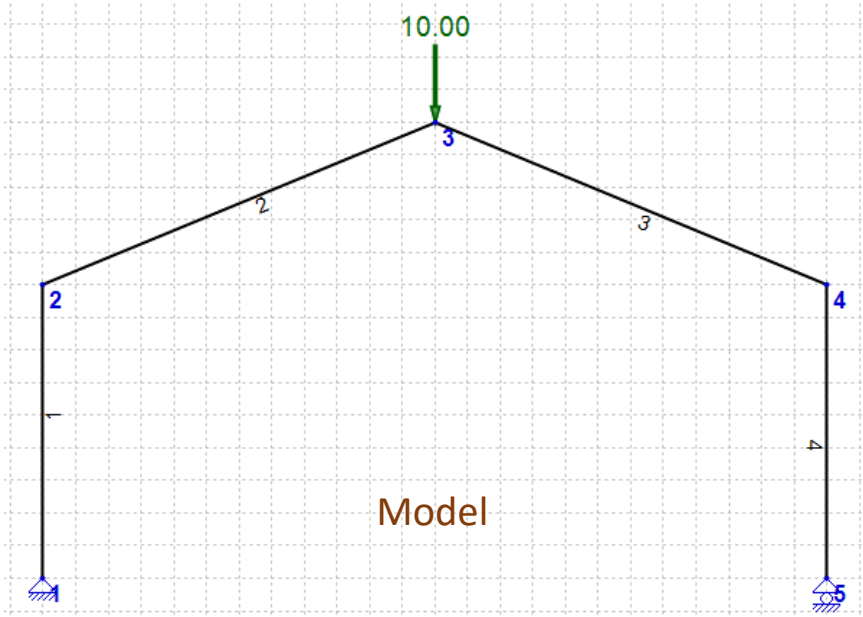

(M)

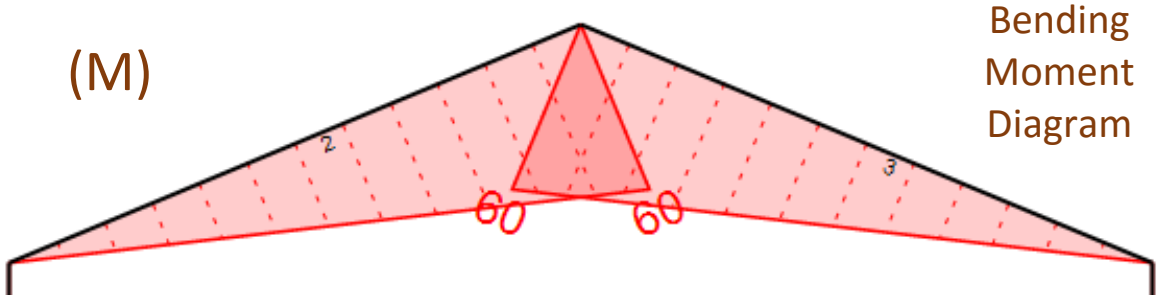

Bending Moment Diagram

(V)

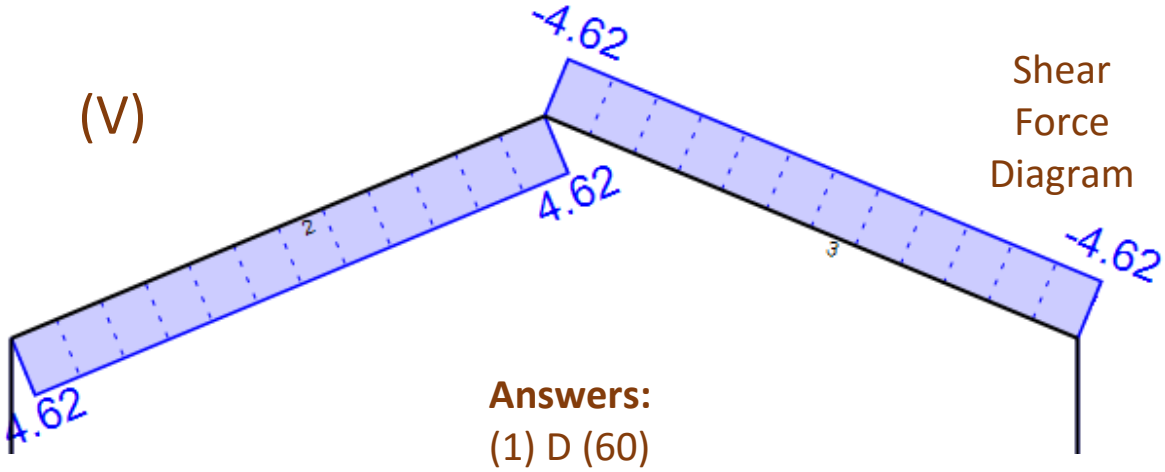

Shear Force Diagram

Answers:

(1) D (60)

(2) B (4.6)

Software BEAM.2D by ENGILAB

www.engilab.com

TRANSFORMED AREA METHOD

REINFORCED CONCRETE BEAM

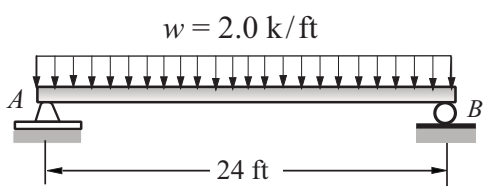

n = 10
(Modular Ratio = 10)

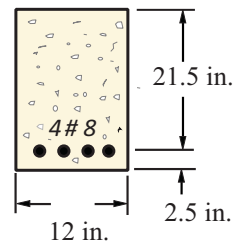

Section

A reinforced concrete beam is loaded as shown in the figure. Assume the weight of the beam is included in the uniform load and the sections have ***cracked***. Using the Transformed Area Method (*TAM*), answer the following:

(1) the max. compressive stress (psi) in concrete is most nearly

(A) 2400
(B) 2250
(C) 2140
(D) 1850

$$f_c = ?$$

(2) the max. tensile stress (psi) in steel is most nearly

(A) 32,600
(B) 29,400
(C) 26,350
(D) 24,500

$$f_s = ?$$

W 12 X 50

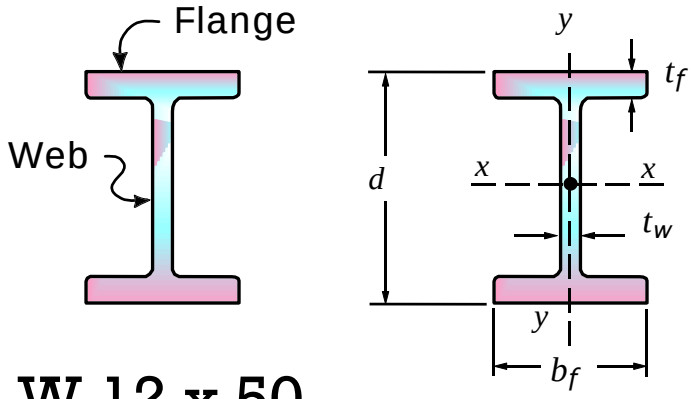

W 12 x 50

Nominal Depth (12 in.)

Weight 50 lb/ft

THIS SHEET GOES WITH
NCEES-REF. HANDBOOK
PAGE-355

- A = Area = 14.6 in^2
- d = Depth = 12.2 in.
- b_f = Flange Width = 8.08 in.
- t_f = Flange Thickness= 0.640 in.
- t_w = Web Thickness = 0.370 in.
- I_x = Moment of Inertia = 391 in^4
- I_y = Moment of Inertia = 56.3 in^4
- S_x = Section Modulus (x-x) = 64.2 in^3
- r_x = Radius of Gyration = 5.18 in
- Major axis or strong axis = (x-x)
- Minor axis or weak axis = (y-y)

Dr. Z's (PRO-BONO) SATURDAY CLASSES

FOR STUDENTS & ENGINEERS IN THE METRO AREA

Saturday, April 16, 2016

11:00 AM - 2:45 PM

"Basically being a PE means that you are at the top of your game, top of your profession. They don't just hand that out to anybody." -- Randal E. Riebel, P.E.

We commend you for taking the time out of your busy schedules to come to school and attend Dr.Z's pro-bono Saturday classes. Your commitment & dedication to Engineering are a true inspiration for all of us.


HAPPY HAPPY BIRTHDAY!
HAPPY
Birthday
AACTA Tournament
ACTA

Dr. Z's PRO-BONO SATURDAY CLASSES

For Students & Practicing Engineers

Washington, D.C. Metro Area

PRO BONO

Participating Schools:

- University of the District of Columbia
- George Mason University
- Howard University
- University of Maryland, College Park
- Catholic University of America
- Virginia Tech
- Villanova University
- North Carolina A & T State University
- Morgan State University

Instructor:

Ahmet Zeytinci, Ph.D., P.E., F-NSPE
ASEE - MA Distinguished Teaching Award-2016
Dr. M. H. Parker, Distinguished Educator's Award-2016
NSPE-Excellence in Engineering Education, National Award-2015
ASEE-MA Outstanding Campus Representative Award-2015
MATHCOUNTS, D.C.
Tel: 240-535-6060 (cell)
email: drz@4drz.com