SELECTED FE/PE TOPICS COVERED IN THIS ISSUE

- First Things First, what do we need?
- CASIO FX-115-ES PLUS
- **Mathematics**
- Sample math computations using the CASIO FX-115
    - Definite integrals
    - Matrices and determinants
    - Converting decimal numbers to binary numbers and vice versa.
- **Statics**
    - Determining beam reactions
    - Simple and cantilever beams
    - Centroids and moments of inertia
    - One truss problem
- **Mechanics of Solids**
    - One axial load problem
    - Shear force and bending moment diagrams
    - Deflections of beams
    - Wide Flange Shapes, W-Shapes
    - NCEES-Reference Handbook, Page-155

Tips, answers and solutions will be in the next issue of ASCE-NCS Newsletter.

WHAT DO YOU NEED ?

NCEES REFERENCE MANUAL

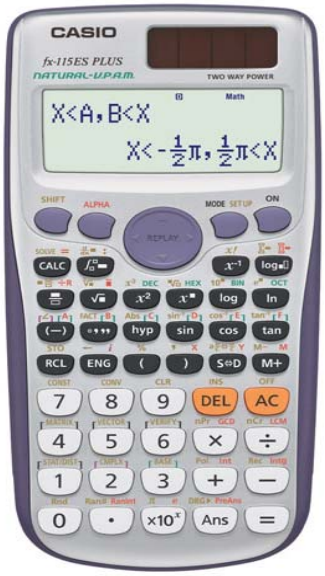

FX-115ESPLUS

CALCULATOR

D-RING BINDER

CANVAS BAG

ASCE-620
ZEYTINCI
FALL 2014

CASIO-115 ES PLUS

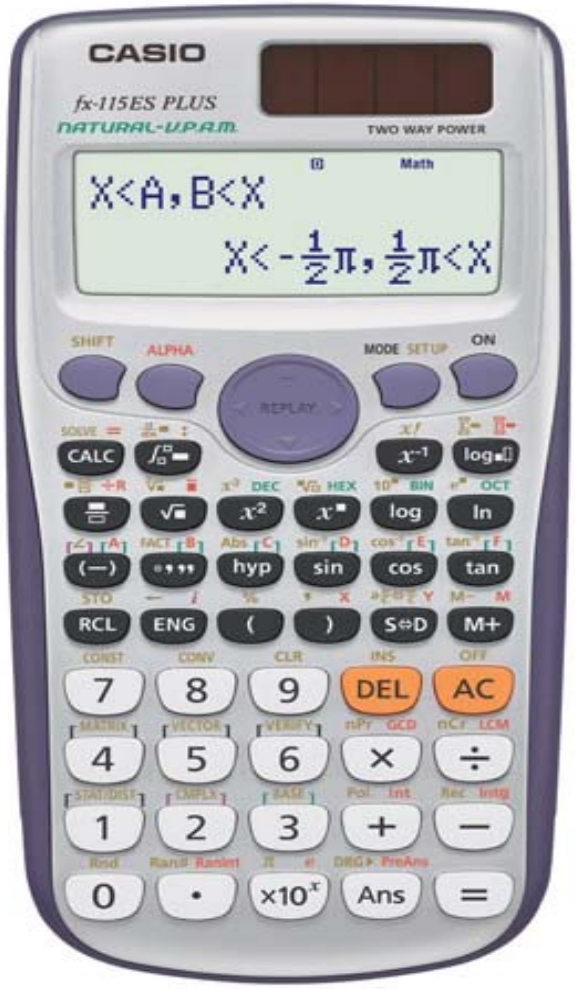

FX-115ESPLUS

This $15 gadget will definitely be your best helper during your FE or PE exams. This calculator is Casio's latest and most advanced scientific calculator that features new Natural Textbook Display and Improved Math Functionality.

Starting next ASCE-NCS newsletter issue, we will actually show you, step by step, how to solve dozens of problems and get the correct answers in less than 15 SECONDS using this calculator.

ASCE-111
ZEYTINCI
FALL 2014

DEFINITE INTEGRALS
AREAS UNDER CURVES
Using CASIO FX-115 ES PLUS

Problem:

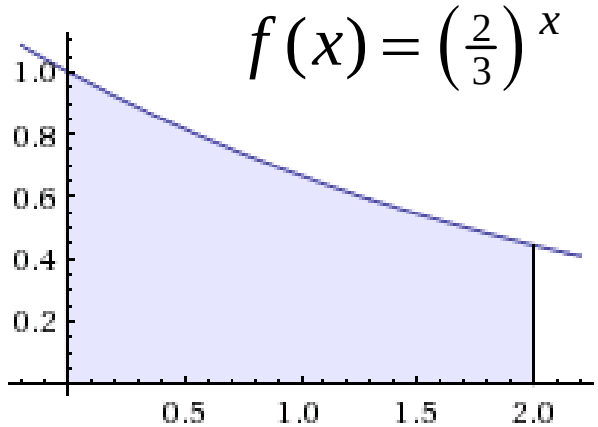

The area under the graph shown is most nearly:

(A) 5.06
(B) 4.25
(C) 2.15
(D) 1.37

SAMPLE (FE) PROBLEMS

MORNING SESSION

MATHEMATICS

Problem:

$$I = \int_0^3 x^2 \,.\, (e^{x^2})\, dx$$

The value of the definite integral shown above is most nearly:

(A) **20**

(B) **3986**

(C) **1112**

(D) **11432**

Comments:

At first sight, this problem seems highly complex, but it is not. You can easily get the correct answer in exactly 15 seconds. Yes, in 15 seconds!

What can you do with your CASIO FX-115 ES *PLUS* ?

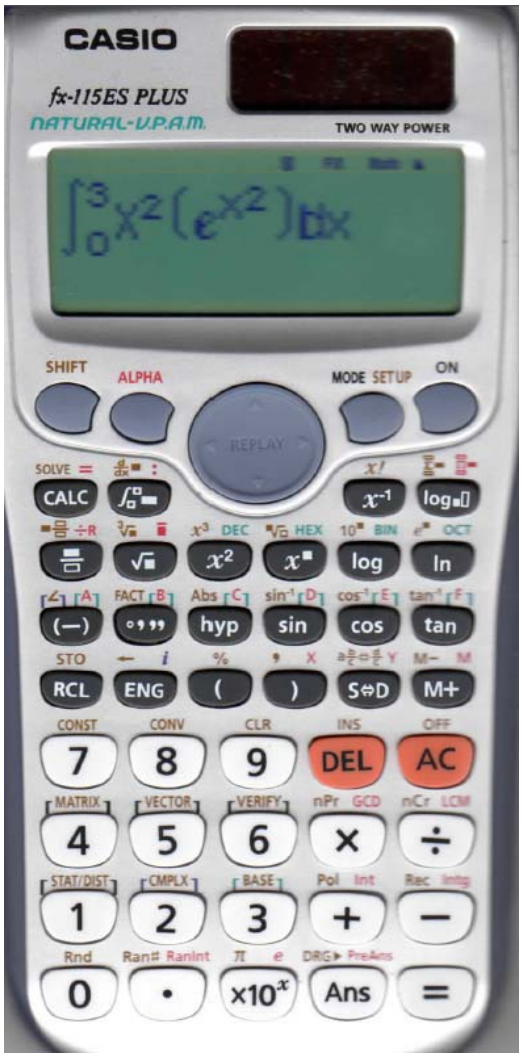

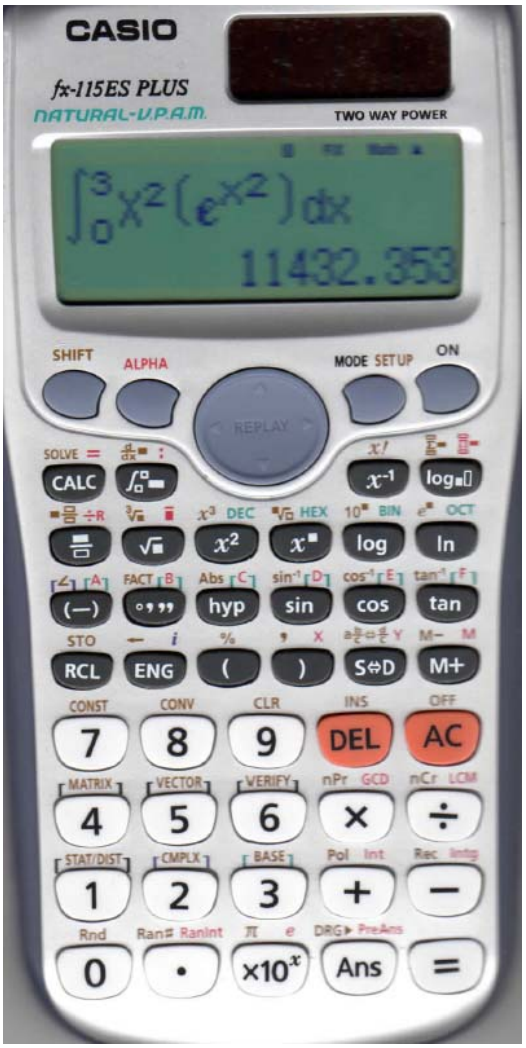

Enter the equation
Into the calculator

Just hit the [=] KEY
and wait 15 seconds

Answer =

11432.353

ASCE-420
ZEYTINCI
FALL 2014

Problem: (Matrix Algebra)

$$B = \begin{bmatrix} 1 & 2 & 0 \\ 2 & -5 & -2 \\ -1 & 3 & 1 \end{bmatrix}$$

A square matrix [B] is given above. Answer the following questions:

(1) the determinant of matrix [B] is most nearly, det [B]

(A) 1
(B) 2
(C) -3
(D) -1

(2) the inverse of matrix [B] is most nearly, (B^{-1})

(A) $$B^{-1} = \begin{bmatrix} 1 & 2 & 4 \\ 0 & 13 & 1 \\ 4 & -5 & 3 \end{bmatrix}$$

(B) $$B^{-1} = \begin{bmatrix} 10 & -2 & 7 \\ 0 & 13 & 9 \\ 2 & -8 & 2 \end{bmatrix}$$

(C) $$B^{-1} = \begin{bmatrix} 1 & -2 & -4 \\ 0 & -3 & -8 \\ 3 & -9 & 2 \end{bmatrix}$$

(D) $$B^{-1} = \begin{bmatrix} 1 & -2 & -4 \\ 0 & 1 & 2 \\ 1 & -5 & -9 \end{bmatrix}$$

IN NEXT THE NEWSLETTER
WE WILL SHOW YOU HOW
TO GET ANSWERS ONLY
IN 18 SECONDS !

Problem: (Matrix Algebra)

$$\mathbf{A} = \begin{bmatrix} 2 & -3 \\ 1 & -1 \end{bmatrix} \qquad \mathbf{B} = \begin{bmatrix} 1 & 2 & 0 \\ 2 & -5 & -2 \end{bmatrix}$$

Using the matrices given above, answer the following questions:

(1) the determinant of the matrix **A** is most nearly

(A) 4
(B) -3
(C) -2
(D) 1

IT SHOULD NOT TAKE MORE THAN 20 SECONDS TO GET THE ANSWERS!

(2) the matrix product of **A** and **B** is most nearly, A*B

(A) $A*B = \begin{bmatrix} -4 & 12 & -10 \\ 2 & -5 & -2 \end{bmatrix}$

(B) $A*B = \begin{bmatrix} -1 & 12 & -4 \\ 0 & -5 & -2 \end{bmatrix}$

(C) $A*B = \begin{bmatrix} -4 & 19 & 6 \\ -1 & 7 & 2 \end{bmatrix}$

(D) $A*B = \begin{bmatrix} -2 & 11 & -20 \\ 2 & 13 & 7 \end{bmatrix}$

CASIO / *fx*-115 ES PLUS

MODE

(1) COMP
(2) CMPLX
(3) STAT
(4) BASE-N
(5) EQN
(6) MATRIX
(7) TABLE
(8) VECTOR

SHIFT **SETUP**

(1) Mth-IO
(2) Line-IO
(3) Deg
(4) Rad
(5) Gra
(6) Fix
(7) Sci
(8) Norm

Frequently asked two Number Systems:

1- Decimal Number System (base 10)
2- Binary Number System (base 2)

In Decimal System 10 different digits are used to create any number, but in Binary System only 0s and 1s are used to create any number

DECIMAL	BINARY
2	10
3	11
5	101
6	110
8	1000
9	1001
10	1010
12	1100
14	1110
15	1111
19	10011
25	11001

SIMPLE BEAM SUPPORT REACTIONS

SHORTCUT FORMULAS

FE/PE EXAM

1

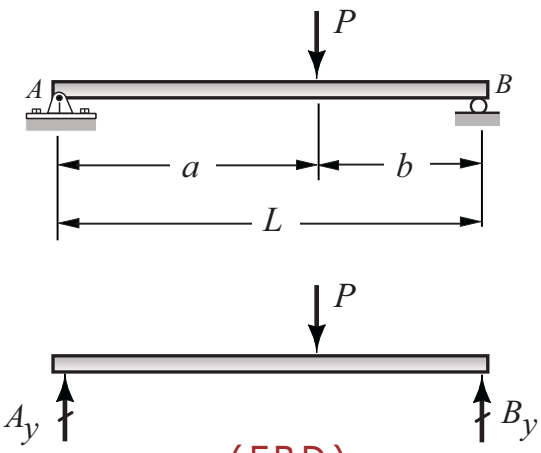

(FBD)

$$A_y = P\left(\frac{b}{L}\right)$$

$$B_y = P\left(\frac{a}{L}\right)$$

2

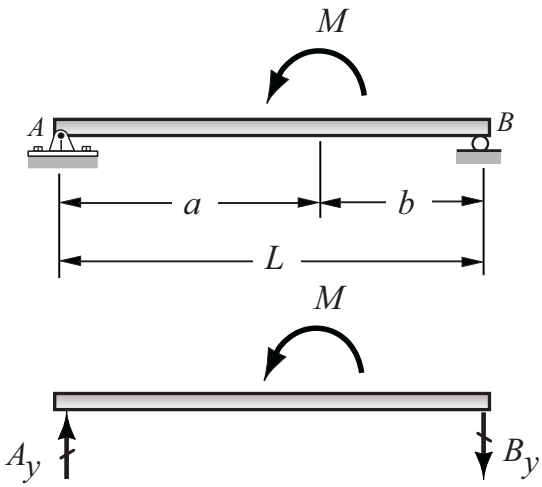

(FBD)

$$A_y = \frac{M}{L}$$

$$B_y = \frac{M}{L}$$

SIMPLE BEAM SUPPORT REACTIONS

SUPERPOSITION METHOD

FE/PE EXAM

1

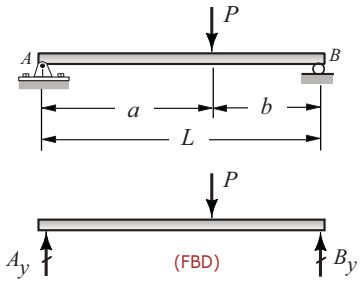

$$A_y = P\left(\frac{b}{L}\right)$$

$$B_y = P\left(\frac{a}{L}\right)$$

2

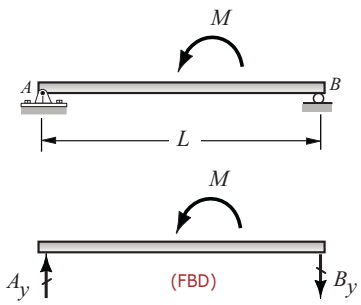

$$A_y = \frac{M}{L}$$

$$B_y = \frac{M}{L}$$

Example-1

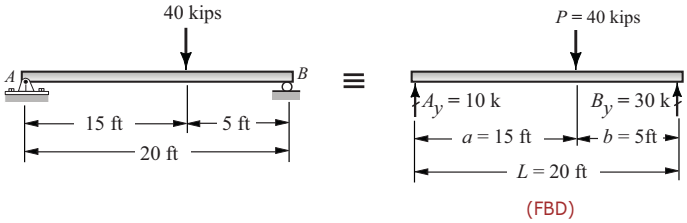

$$A_y = P\left(\frac{b}{L}\right) = 40\left(\frac{5}{20}\right) = 10 \text{ k} \uparrow$$

$$B_y = P\left(\frac{b}{L}\right) = 40\left(\frac{15}{20}\right) = 30 \text{ k} \uparrow$$

Example-2

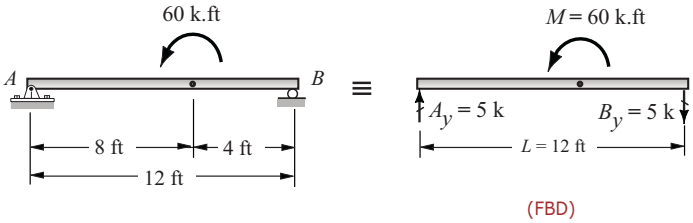

$$A_y = \frac{M}{L} = \frac{60}{12} = 5 \text{ kips} \uparrow$$

$$B_y = \frac{M}{L} = \frac{60}{12} = 5 \text{ kips} \downarrow$$

Example-3

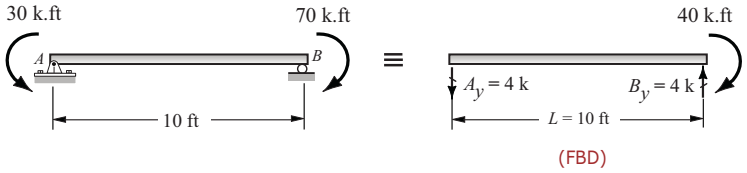

$$A_y = \frac{M}{L} = \frac{40}{10} = 4 \text{ kips} \downarrow$$

$$B_y = \frac{M}{L} = \frac{40}{10} = 4 \text{ kips} \uparrow$$

Problem: (Beam Support Reactions / Superposition Method)

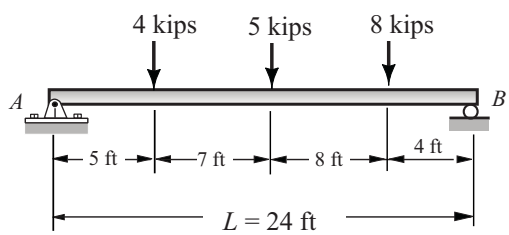

Support A : Hinge
Support B : Roller

Determine the support reactions using the superposition (shortcut) method.

1

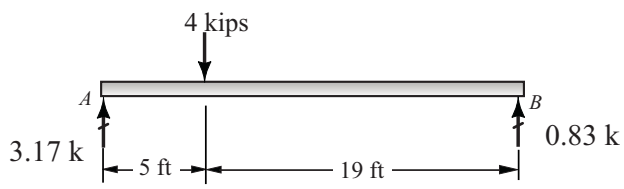

2

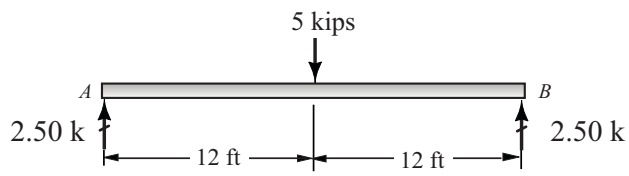

3

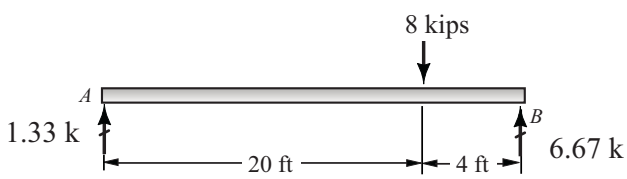

$$A_y = 3.17\text{ k} + 2.5\text{ k} + 1.33\text{ k} = 7.0\text{ kips} \uparrow$$

$$B_y = 0.83\text{ k} + 2.5\text{ k} + 6.67\text{ k} = 10.0\text{ kips} \uparrow$$

SupportReactions

$A_y = 7$ kips
$B_y = 10$ kips

Problem (Beam Support Reactions)

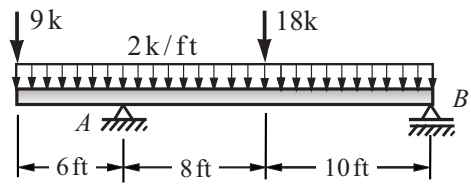

Support A : Hinge
Support B : Roller

Determine the support reactions.

Solution:

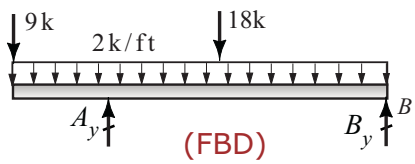

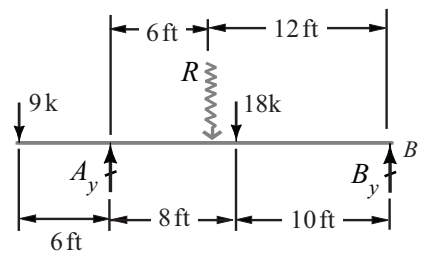

Resultant (Snake): R

R=(2k/ft).(24 ft) = 48 kips

Three Simple Steps:

1- take moment about support A
2- take moment about support B
3- do the final check: $\Sigma F_y = 0$:

Taking moment about support A (M_A)

$\Sigma M_A = 0$: (-9k)(6 ft) + R(6 ft) + 18k (8 ft) - 18.B_y = 0

18 B_y = 54 + (48)(6 ft) - 144

18 B_y = 378

B_y = 21 kips ↑

Taking moment about support B: (M_B)

$\Sigma M_B = 0$: (18k)(10 ft) + R(12 ft) + 9k (24 ft) - 18.A_y = 0

18 A_y = 180 + (48)(12) + 216

18 A_y = 972

A_y = 54 kips ↑

Check:

$+\uparrow \Sigma F_y = 0$: $A_y + B_y \stackrel{?}{=} 9k + 18\ k + R$

21k + 54k $\stackrel{?}{=}$ 9k+18k+48k

75 k = 75 k O.K.

Problem: (Beams/Support Reactions)

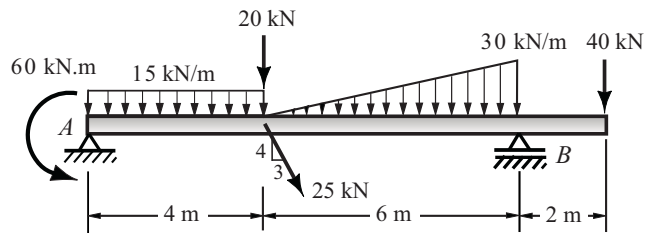

Find the support reactions.

Support A : Hinge
Support B : Roller

Solution:

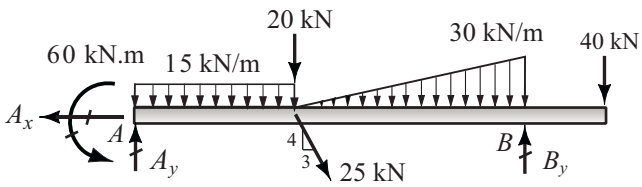

(FBD)

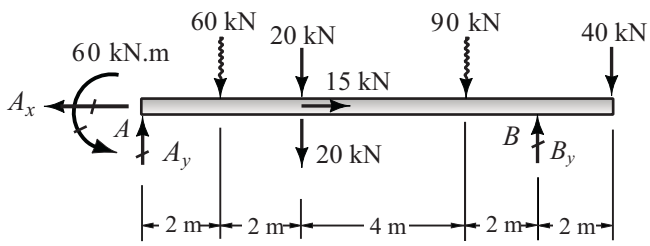

How to find the components of the P = 25 kN inclined load?

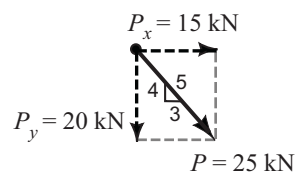

$P_x = P\,(3/5) = 25\,(3/5) = 15$ kN
$P_y = P\,(4/5) = 25\,(4/5) = 20$ kN

Horizontal Equilibrium Equation: (F_x)

$\xrightarrow{+} \Sigma F_y = 0$ $\quad -A_x + 15 \text{ kN} = 0 \quad$ $A_x = 15$ kN ←

Taking moment about point A

$\circlearrowleft + \; \Sigma M_A = 0$

$-60 + (60)(2m) + (20+20)(4m) + (90)(8m) + (40)(12m) - 10.B_y = 0$

$10.B_y = -60 + 120 + 160 + 720 + 480$ solving for B_y : $B_y = 142$ kN ↑

Taking moment about point B

$\circlearrowleft + \; \Sigma M_B = 0$

$60 + (60)(8m) + (20+20)(6m) + (90)(2m) - (40)(2m) - 10.A_y = 0$

$10.A_y = 60 + 480 + 240 + 180 - 80$ solving for A_y : $A_y = 88$ kN ↑

Check:

$+\uparrow \Sigma F_y = 0$

$A_y + B_y \overset{?}{=} 60 + 20 + 20 + 90 + 40$

$88 + 142 \overset{?}{=} 230$

$230 = 230$ O.K.

Answers

$A_x = 15$ kN ←
$A_y = 88$ kN ↑
$B_y = 142$ kN ↑

Problem: (Determinate Beams / Maximum moment)

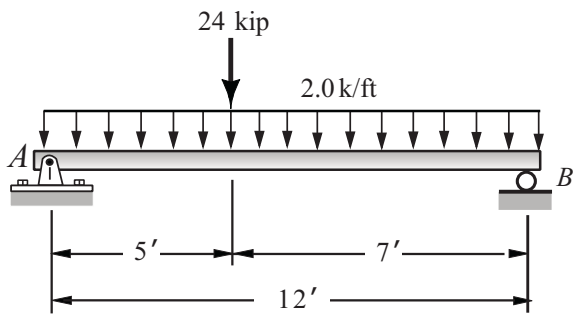

Support A : Hinge
Support B : Roller

The dimensions and loads of a simple beam are given as shown in the figure. Using the listed data, answer the following questions:

(1) the magnitude of the left support reaction (kips) is most nearly

(A) 16
(B) 18
(C) 26
(D) 29

(2) the magnitude of the right support reaction (kips) is most nearly

(A) 20
(B) 22
(C) 24
(D) 30

(3) the distance (ft) for shear crossing the reference line, is most nearly

(A) 6.5
(B) 6.0
(C) 5.0
(D) 4.5

(4) the maximum bending moment (ft-kips) is most nearly

(A) 154
(B) 144
(C) 122
(D) 105

Problem: (Cantilever Beams)

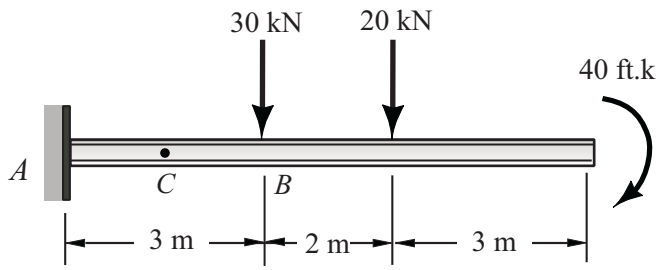

FE/PE EXAM

Support A : Fixed

The cantilever beam is loaded as shown in the figure. Using the given loads and the support condition, answer the following questions:

(1) The vertical support reaction (kN) at the fixed support, A_y

(A) 80
(B) 75
(C) 60
(D) 50

(2) The bending moment (kN.m) at the fixed support, M_A

(A) 230
(B) 340
(C) 425
(D) 560

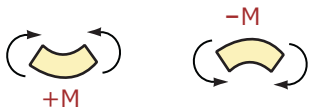

(3) The moment (kN.m) at C, the mid-point of AB, is most nearly, M_C

(A) 110
(B) 125
(C) 138
(D) 155

(4) The shear force (kN) at the mid-point of AB is most nearly

(A) 42.5
(B) 50.0
(C) 67.5
(D) 70.0

Problem: (Cantilever Beams)

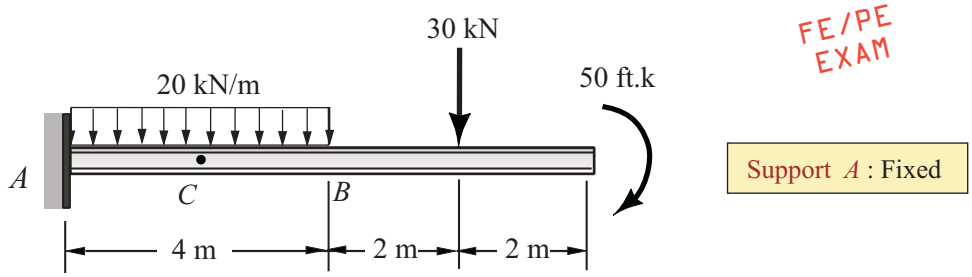

The cantilever beam is loaded as shown in the figure. Using the given loads and the support condition, answer the following questions:

(1) The vertical support reaction (kN) at the fixed support, A_y

(A) 140
(B) 125
(C) 110
(D) 100

(2) The bending moment (kN.m) at the fixed support, M_A

(A) 290
(B) 390
(C) 465
(D) 520

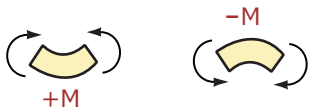

(3) The moment (kN.m) at C, the mid-point of AB, is most nearly, M_C

(A) 515
(B) 420
(C) 338
(D) 210

(4) The shear force (kN) at the mid-point of AB is most nearly

(A) 42.5
(B) 50.0
(C) 60.5
(D) 70.0

Problem: (Cantilever Beams)

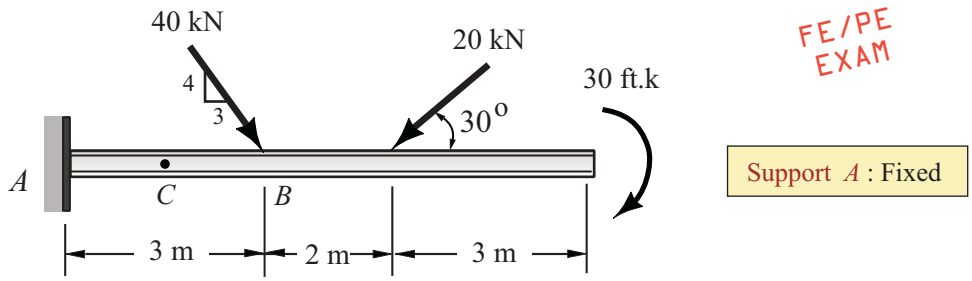

FE/PE EXAM

The cantilever beam is loaded as shown in the figure. Using the given loads and the support condition, answer the following questions:

(1) The horizontal and vertical support reactions (kN) at the fixed support, A_x , A_y

(A) 5.46 and 38
(B) 6.68 and 42
(C) 7.12 and 64
(D) 9.24 and 82

(2) The bending moment (kN.m) at the fixed support, M_A

(A) 416
(B) 314
(C) 225
(D) 176

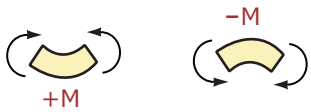

(3) The moment (kN.m) at C, the mid-point of *AB,* is most nearly, M_C

(A) 93
(B) 113
(C) 128
(D) 136

(4) The shear force (kN) at the mid-point of *AB* is most nearly

(A) 22.5
(B) 24.6
(C) 37.5
(D) 42.0

Problem: (Cantilever Beams)

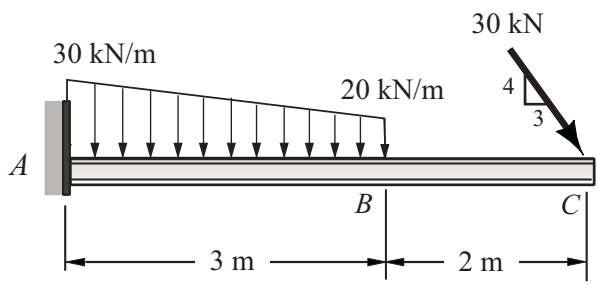

FE/PE EXAM

Support A : Fixed

A cantilever beam is loaded as shown in the figure. Using the given loads and the support condition, answer the following questions:

(1) The vertical support reaction (kN) at the fixed support, A_y

(A) 69
(B) 78
(C) 87
(D) 99

(2) The bending moment (kN.m) at the fixed support, M_A

(A) 125
(B) 185
(C) 205
(D) 225

(3) The horizontal support reaction (kN) at the fixed support, A_x

(A) 15.0
(B) 18.0
(C) 21.5
(D) 28.0

(4) The bending moment (kN.m) at the mid-point of *AB* is most nearly

(A) 94.5
(B) 108.4
(C) 122.5
(D) 148.7

Problem: (Cantilever Beams)

FE/PE EXAM

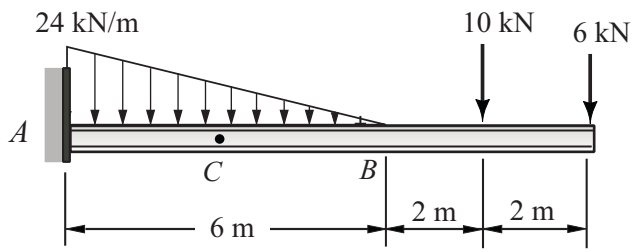

Support A : Fixed

A cantilever beam is loaded as shown in the figure. Using the given loads and support condition, answer the following questions:

(1) The vertical support reaction (kN) at the fixed support, A_y

(A) 88
(B) 105
(C) 113
(D) 128

(2) The bending moment (kN.m) at the fixed support, M_A

(A) 510
(B) 414
(C) 325
(D) 284

(3) The moment (kN.m) at C, the mid-point of *AB* is most nearly, M_C

(A) 90
(B) 110
(C) 122
(D) 134

(4) The shear force (kN) at the mid-point of *AB* is most nearly

(A) 21.5
(B) 34.0
(C) 47.5
(D) 52.5

OVERHANGING BEAM SUPPORT REACTIONS

SUPPLEMENTAL PROBLEMS

1

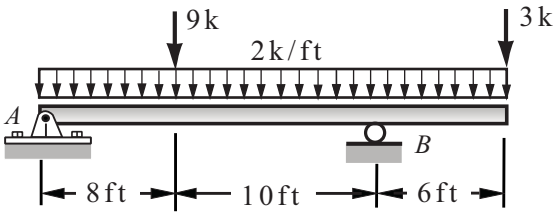

$A_y = 20$ kip
$B_y = 40$ kip
$x = 8.0$ ft
$M_{max} = 96$ ft-kip

2

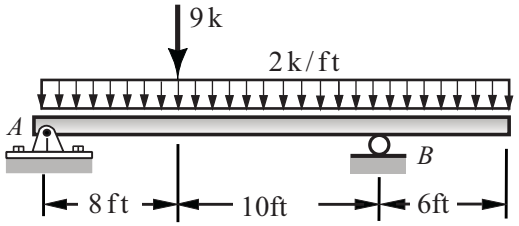

$A_y = 21$ kip
$B_y = 36$ kip
$x = 8.0$ ft
$M_{max} = 104$ ft-kip

3

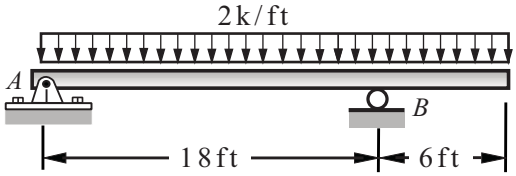

$A_y = 16$ kip
$B_y = 32$ kip
$x = 8.0$ ft
$M_{max} = 64$ ft-kip

4

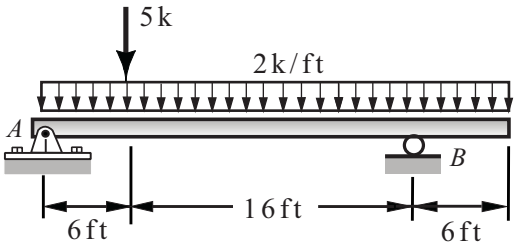

$A_y = 24$ kip
$B_y = 37$ kip
$x = 9.5$ ft
$M_{max} = 120.25$ ft-kip

5

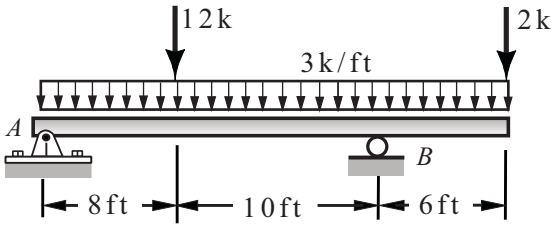

$A_y = 30$ kip
$B_y = 56$ kip
$x = 8.0$ ft
$M_{max} = 144$ ft-kip

SAMPLE (FE) PROBLEM

STATICS

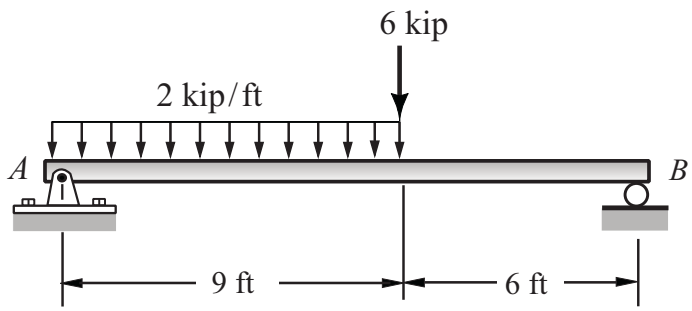

Support A : Pin
Support B : Roller

A simply supported beam is loaded as shown. Using the listed support conditions, the maximum bending moment (k-ft) in the beam is most nearly:

(A) 45.00
(B) 56.25
(C) 64.50
(D) 72.75

SAMPLE (FE) PROBLEM

STATICS

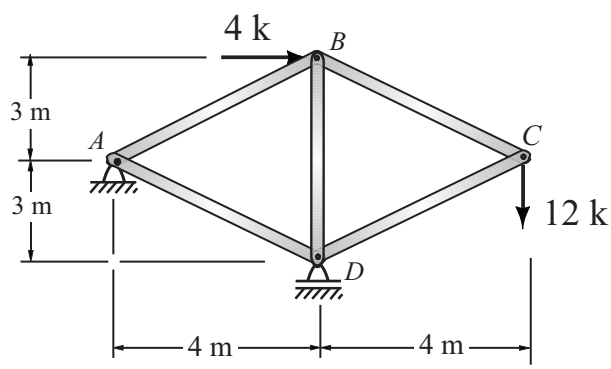

Support A : Pin
Support D : Roller

A plane truss system is loaded as shown. Using the listed support conditions, the magnitude of the member force (kN) in member *BD* is most nearly:

(A) 15.00 (C)
(B) 25.25 (T)
(C) 30.00 (C)
(D) 20.00 (T)

Problem: (Plane Truss)

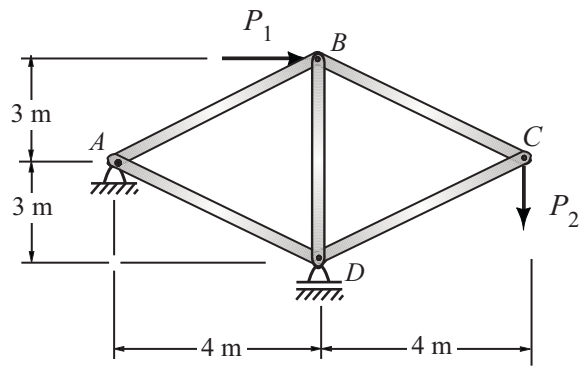

Support A : Hinge
Support D : Roller

Support Reactions and Member Forces

A

$P_1 = 4$ kN
$P_2 = 12$ kN

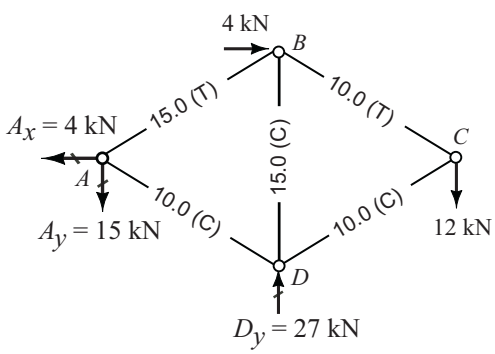

B

$P_1 = 8$ kN
$P_2 = 12$ kN

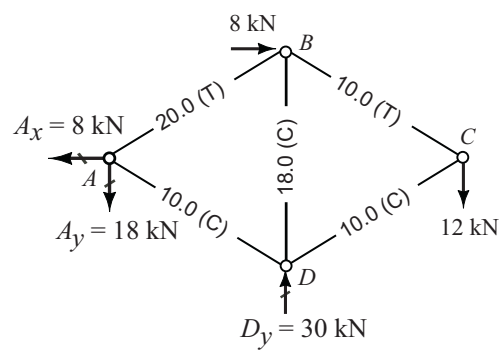

C

$P_1 = 2$ kN
$P_2 = 3$ kN

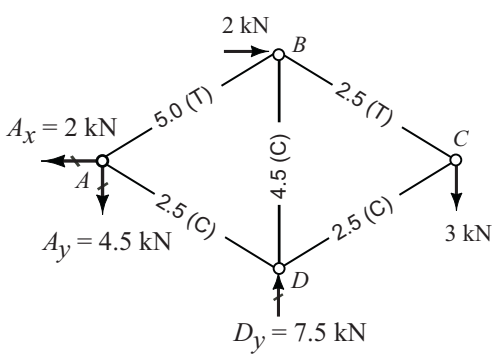

D

$P_1 = 4$ kN
$P_2 = 18$ kN

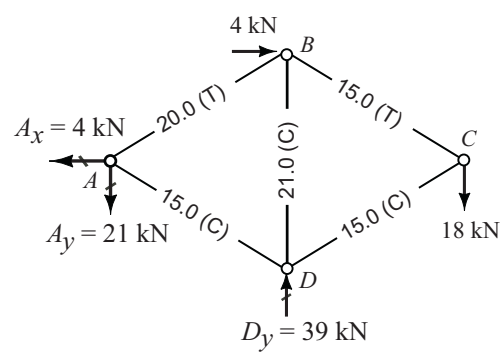

SAMPLE (FE) PROBLEM

MECHANICS OF MATERIALS

Problem: (Axial Load)

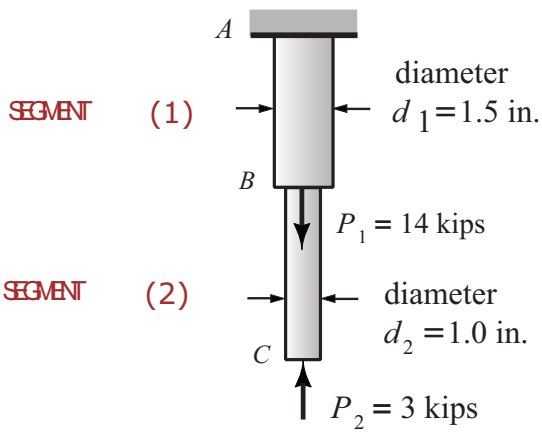

A stepped rod with circular cross-section is subjected to the axial loads as shown in the figure. Using the listed data answer the following:

(1) The axial stress (psi) in segment #1 is most nearly:

(A) 3,500 (C)
(B) 4,250 (T)
(C) 5,360 (C)
(D) 6,220 (T)

(2) The axial stress (psi) in segment #2 is most nearly:

(A) 2,120 (C)
(B) 3,820 (C)
(C) 4,440 (C)
(D) 5,000 (T)

IMPORTANT FORMULAS

Problem: (Rectangle)

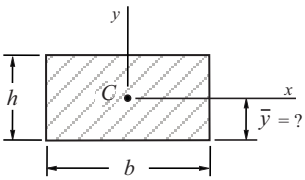

C: Centroid
Origin of axes at *C*

(a) Area of the rectangle (A = ?)
(b) Centroid of the rectangle ($\bar{y}$ = ?)
(c) Moment of inertia about the x axis (I_{cx} = ?)
(d) Moment of inertia about the y axis (I_{cy} = ?)

Formulas:

$$A = bh$$

$$\bar{y} = \frac{h}{2}$$

$$I_{cx} = \frac{b\,h^3}{12}$$

$$I_{cy} = \frac{h\,b^3}{12}$$

Example:

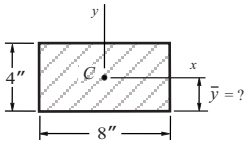

$$A = bh = (8)(4) = 32 \text{ in.}^2$$

$$\bar{y} = \frac{h}{2} = \frac{4}{2} = 2 \text{ in.}$$

$$I_{cx} = \frac{b\,h^3}{12} = \frac{(8)(4)^3}{12} = 42.67 \text{ in.}^4$$

$$I_{cy} = \frac{h\,b^3}{12} = \frac{(4)(8)^3}{12} = 170.67 \text{ in.}^4$$

Problem: (Triangular Area)

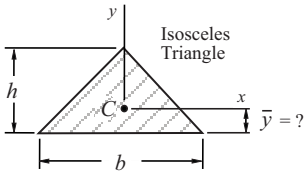

C : Centroid
x, y : Centroidal axes

(a) Area of the triangle (A = ?)
(b) Centroid of the triangle ($\bar{y}$ = ?)
(c) Moment of inertia about the x axis (I_{cx} = ?)
(d) Moment of inertia about the y axis (I_{cy} = ?)

Formulas:

$$A = \frac{bh}{2}$$

$$\bar{y} = \frac{h}{3}$$

$$I_{cx} = \frac{b\,h^3}{36}$$

$$I_{cy} = \frac{h\,b^3}{48}$$

Example:

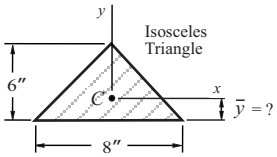

$$A = \frac{bh}{2} = \frac{(8)(6)}{2} = 24 \text{ in.}^2$$

$$\bar{y} = \frac{h}{3} = \frac{6}{3} = 2 \text{ in.}$$

$$I_{cx} = \frac{b\,h^3}{36} = \frac{(8)(6)^3}{36} = 48.00 \text{ in.}^4$$

$$I_{cy} = \frac{h\,b^3}{48} = \frac{(6)(8)^3}{48} = 64.00 \text{ in.}^4$$

Problem: (Half Circle)

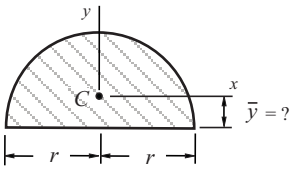

(a) Area of the semicircle (A = ?)
(b) Centroid of the semicircle ($\bar{y}$ = ?)
(c) Moment of inertia about the x axis (I_{cx} = ?)
(d) Moment of inertia about the y axis (I_{cy} = ?)

Solution:

$$A = \frac{\pi r^2}{2} \qquad \bar{y} = \frac{4r}{3\pi}$$

$$I_{cx} = \frac{r^4}{72\pi} \cdot (9\pi^2 - 64)$$

$$I_{cx} \approx 0.109757 \cdot r^4$$

$$I_{cy} = \frac{\pi r^4}{8}$$

Problem: (Trapezoidal Area)

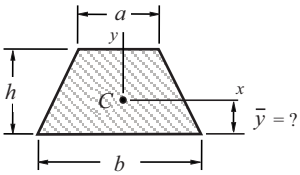

C : Centroid
x, y : Centroidal axes

Isosceles
Trapezoid

(a) Area of the trapezoid (A = ?)
(b) Centroid of the trapezoid ($\bar{y}$ = ?)
(c) Moment of inertia about the x axis (I_{cx} = ?)
(d) Moment of inertia about the y axis (I_{cy} = ?)

Formulas

$$A = \frac{h}{2}(a+b) \qquad \bar{y} = \frac{h}{3}\frac{(2a+b)}{(a+b)}$$

$$I_{cx} = \frac{h^3}{36} \cdot \frac{(a^2 + 4ab + b^2)}{(a+b)}$$

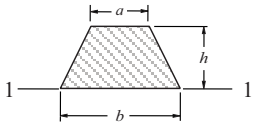

$$I_{cy} = \frac{h\,(a+b)\,(a^2+b^2)}{48}$$

$$I_{1\text{-}1} = \frac{h^3\,(3a+b)}{12}$$

Problem: (Parallel Axis Theorem)

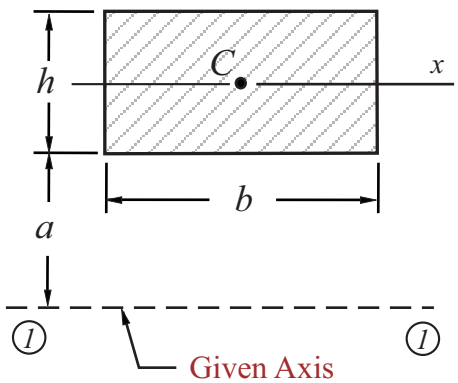

PAT | **Parallel Axis Theorem**

(a) Moment of inertia about the x axis ($I_{cx} = ?$)
(b) Moment of inertia about the (1-1) axis ($I_{1\text{-}1} = ?$)

Formulas:

$$\boxed{I_{cx} = \frac{b\,h^3}{12}}$$

$$\boxed{I_{1\text{-}1} = I_{cx} + A \cdot d^2}$$ **PAT**

I_{cx} = Moment of inertia about the centroidal x axis
$I_{1\text{-}1}$ = Moment of inertia about axis (1-1)
A = Area ($A = b.h$)
d = Distance from the centroid to the axis (1-1)

$$\boxed{d = a + h/2}$$

Example:

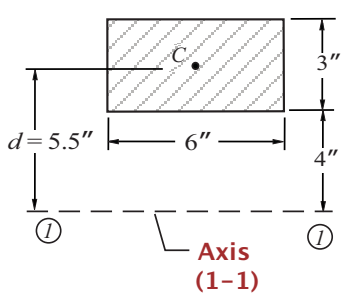

$$I_{cx} = \frac{b\,h^3}{12} = \frac{(6)(3)^3}{12} = 13.50 \text{ in.}^4$$

$$A = bh = (6)(3) = 18 \text{ in.}^2$$

$$d = 4 + \tfrac{3}{2} = 5.5 \text{ in.}$$

$$I_{1\text{-}1} = I_{cx} + A.d^2 = 13.50 + (18)(5.5)^2 = 558 \text{ in.}^4$$

$$\boxed{I_{1\text{-}1} = 558 \text{ in.}^4}$$

SHEAR FORCE AND MOMENT DIAGRAMS

1

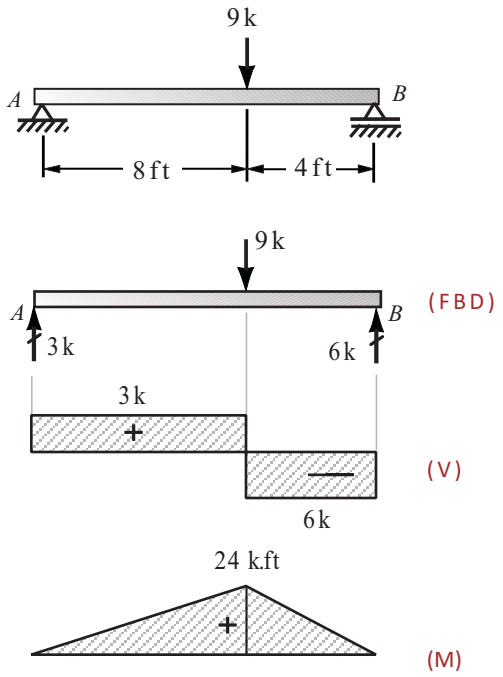

2

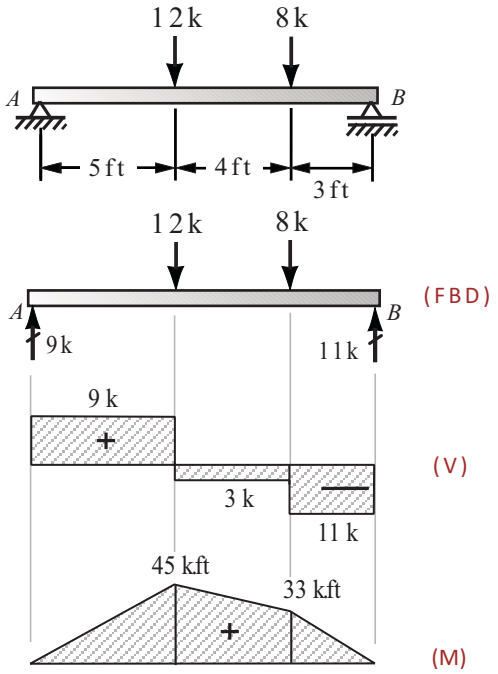

3

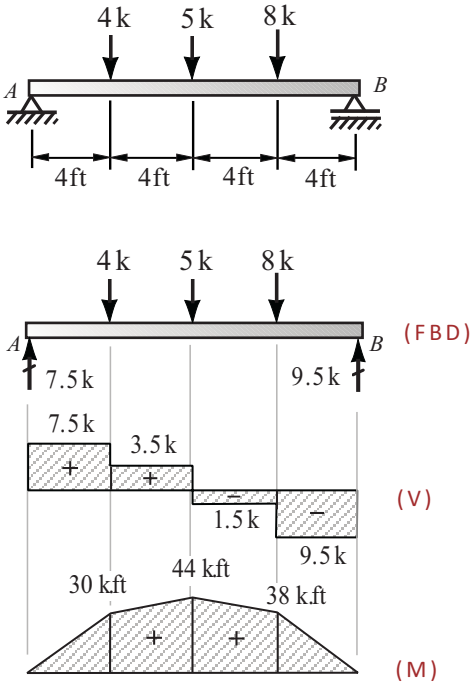

4

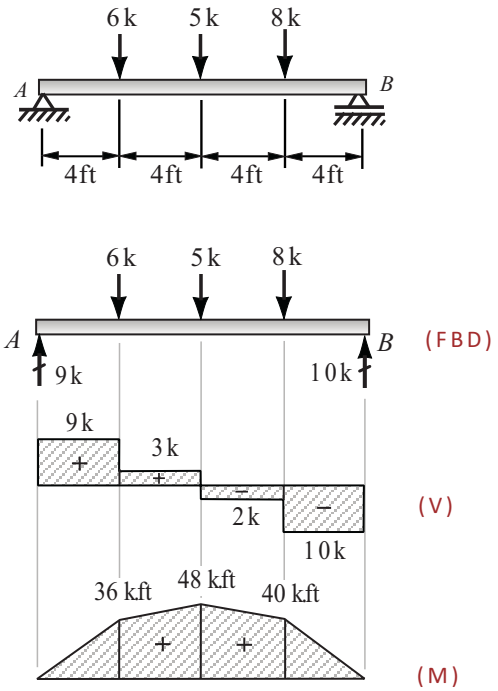

SHEAR AND MOMENT DIAGRAMS

5

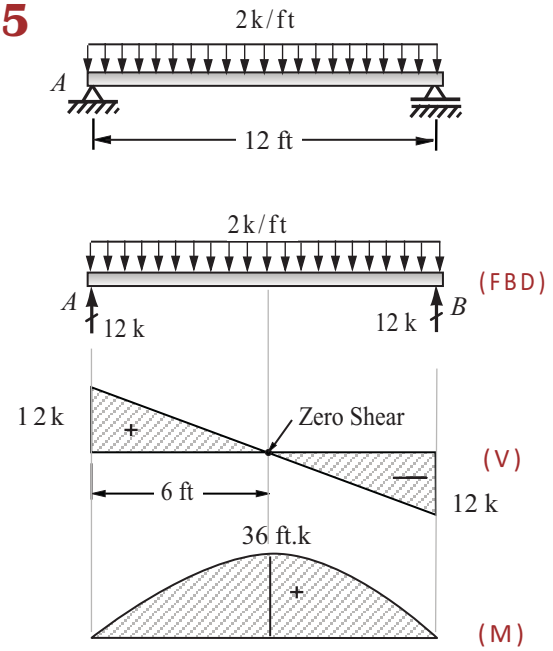

6

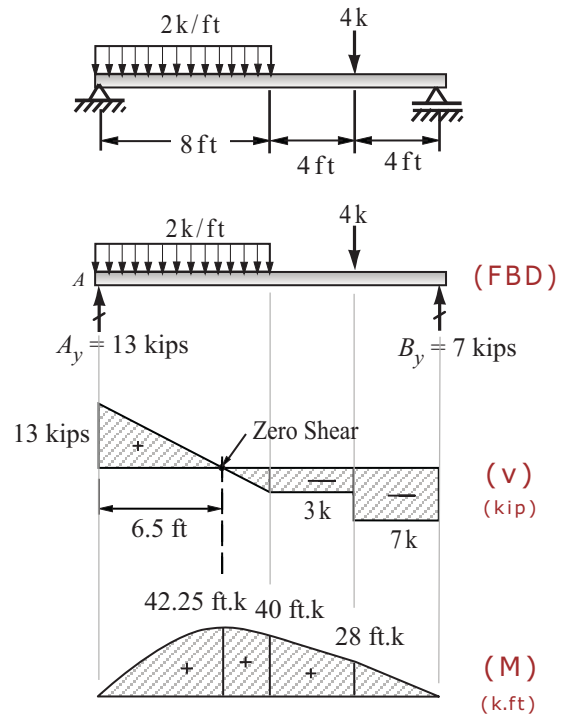

7

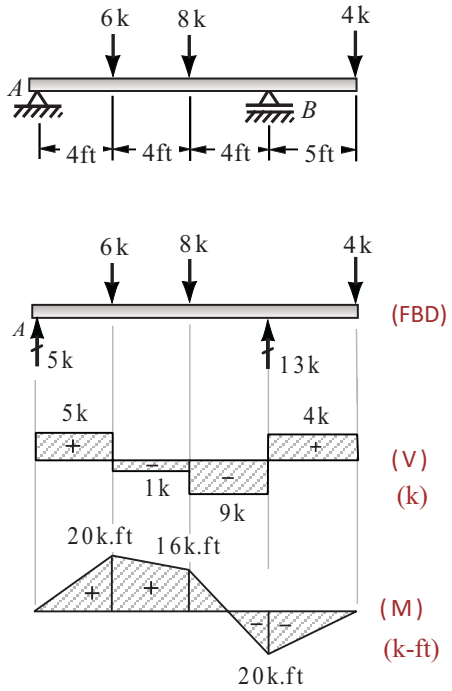

8

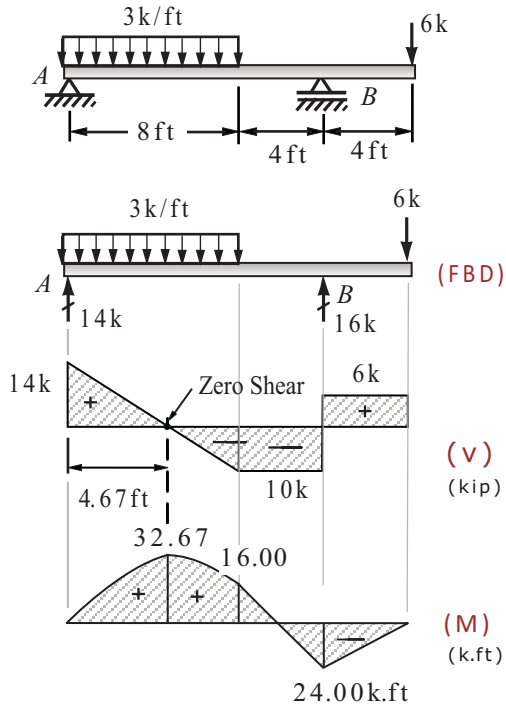

SHEAR AND MOMENT DIAGRAMS

9

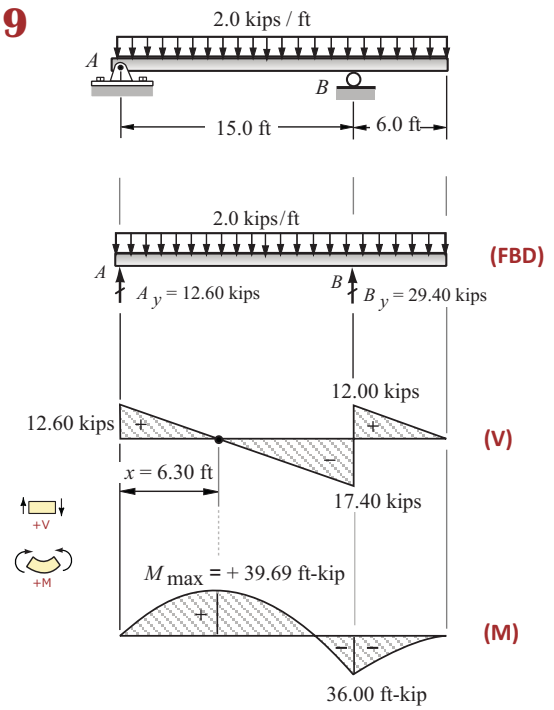

10

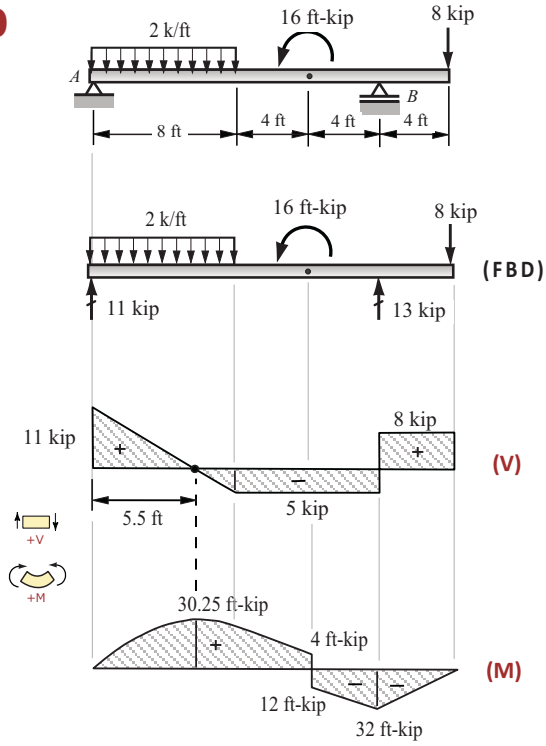

11

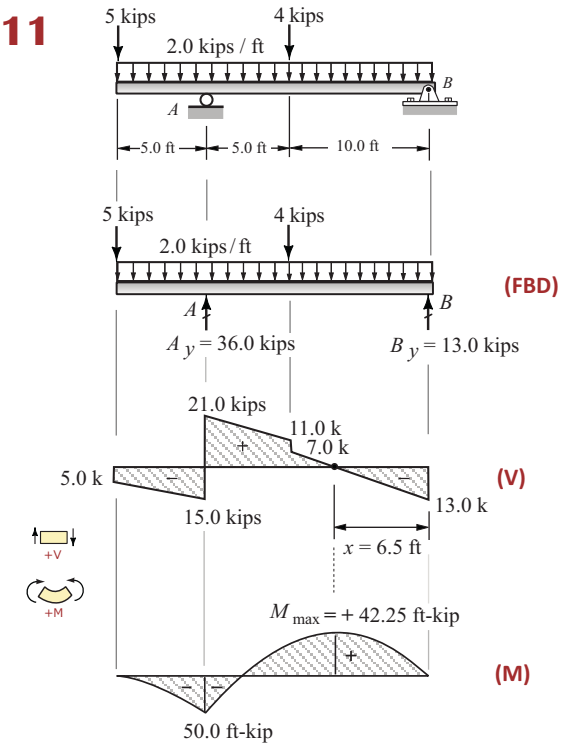

12

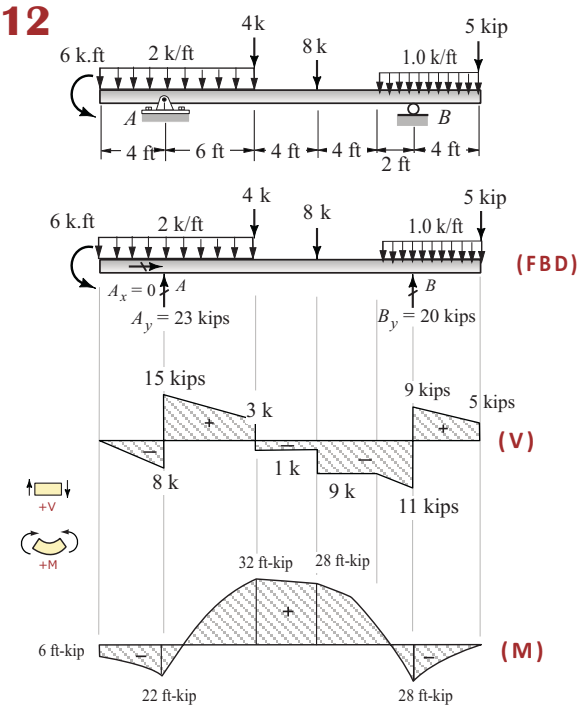

Problem: (Shear and Moment Diagrams)

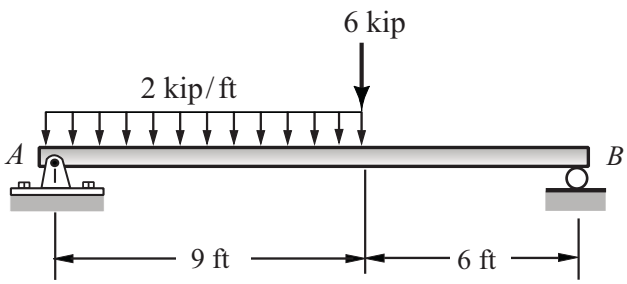

Support A : Pin
Support B : Roller

(a) Determine the support reactions
(b) Draw the shear force diagram
(c) Draw the bending moment diagram

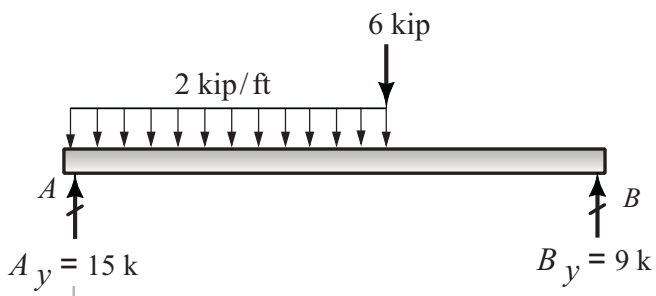

(FBD)

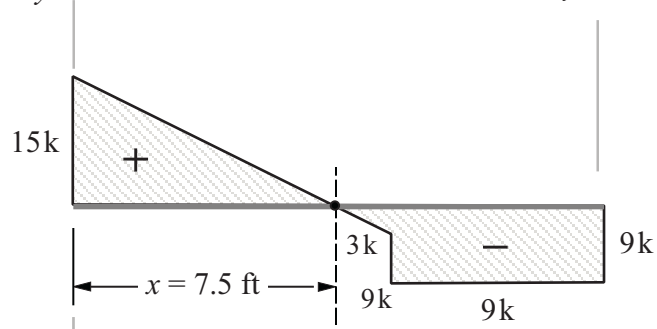

(V)

Shear Force (kips)

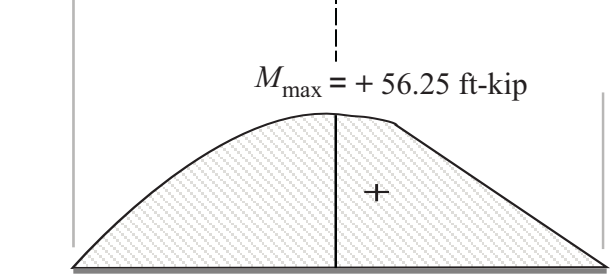

(M)

Bending Moment (ft-kips)

Shear Force and Bending Moment Diagrams

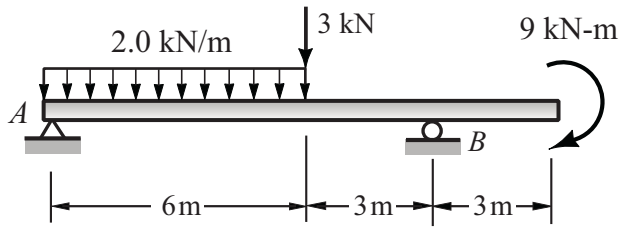

FE/PE EXAM

Support A : Hinge
Support B : Roller

The **shear force** diagram of this beam is most nearly:

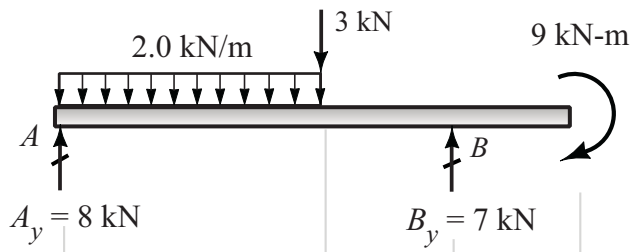

(FBD)

(A)

(B)

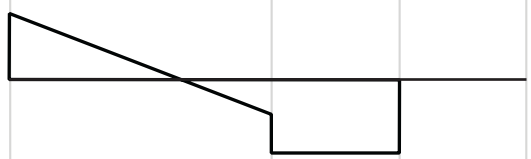

(C)

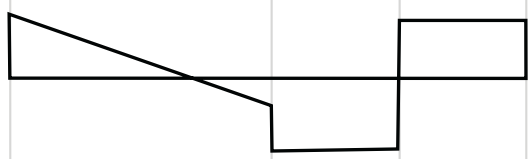

(D)

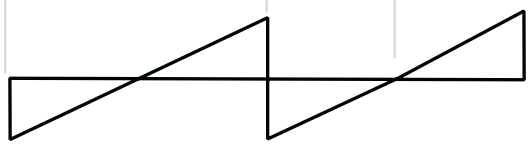

SHEAR FORCE & BENDING MOMENT DIAGRAMS

FE EXAM

1

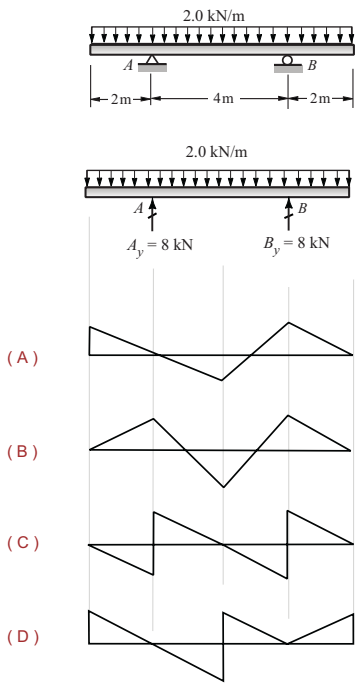

2

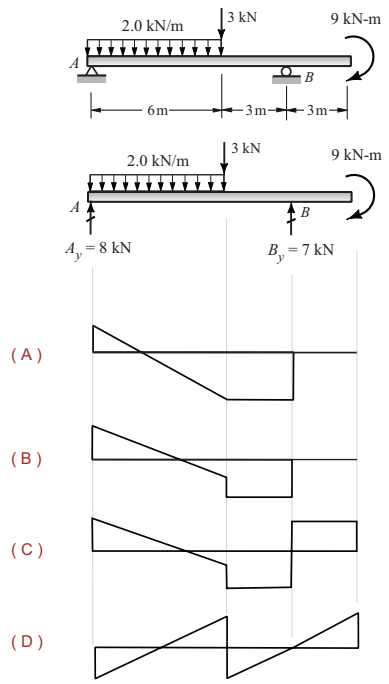

3

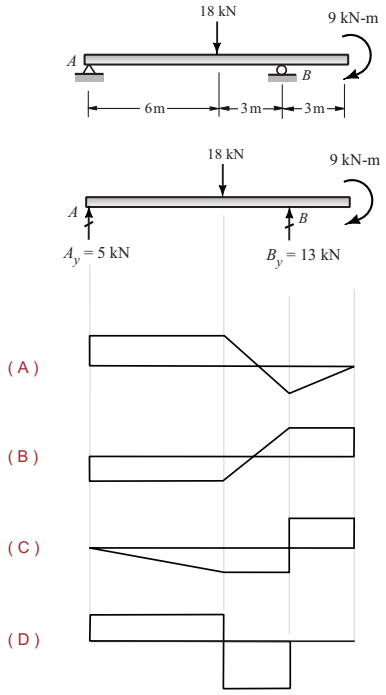

4

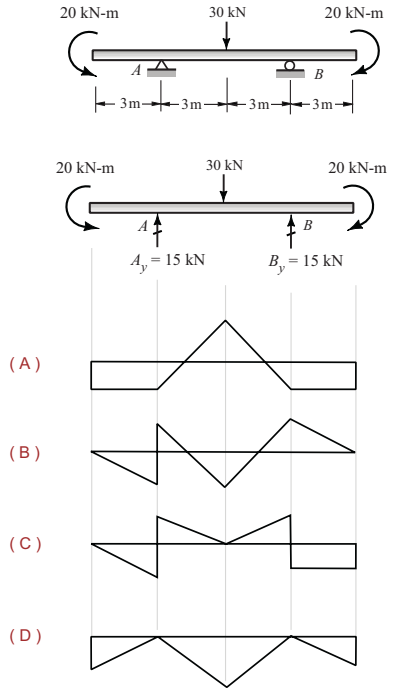

Shear Force and Moment Diagrams

FE EXAM

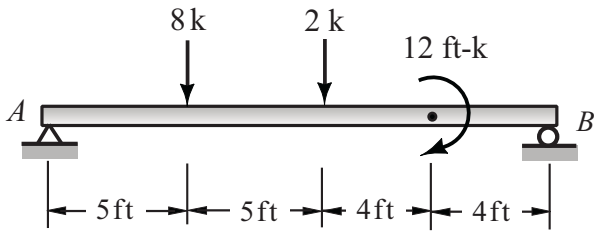

The shear force diagram of the beam is most nearly:

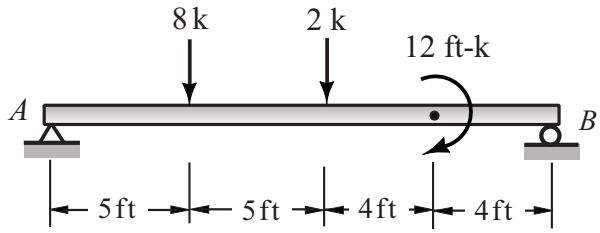

(A)

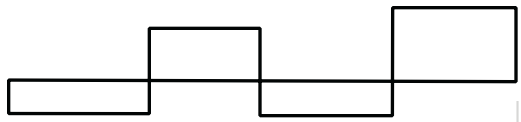

(B)

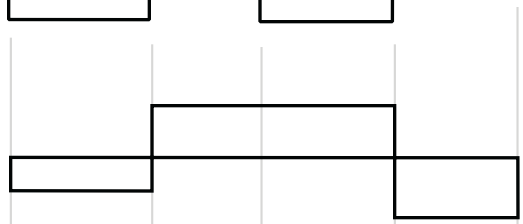

(C)

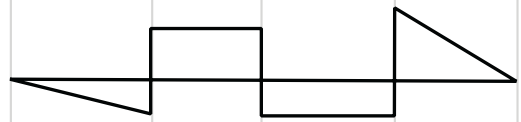

(D)

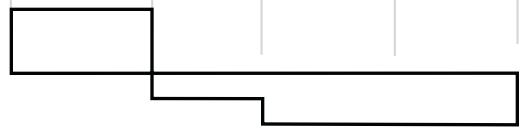

Problem: Shear Force and Moment Diagrams

FE EXAM

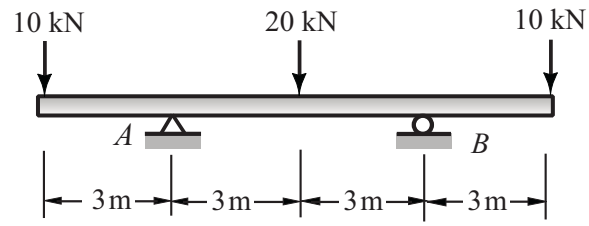

The moment diagram of this beam is most nearly:

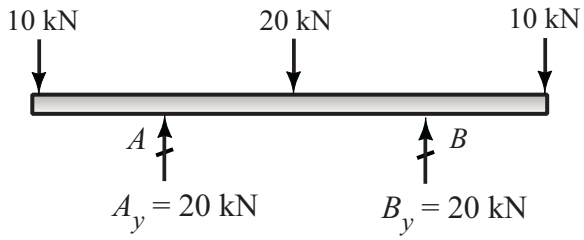

(FBD)

(A)

(B)

(C)

(D)

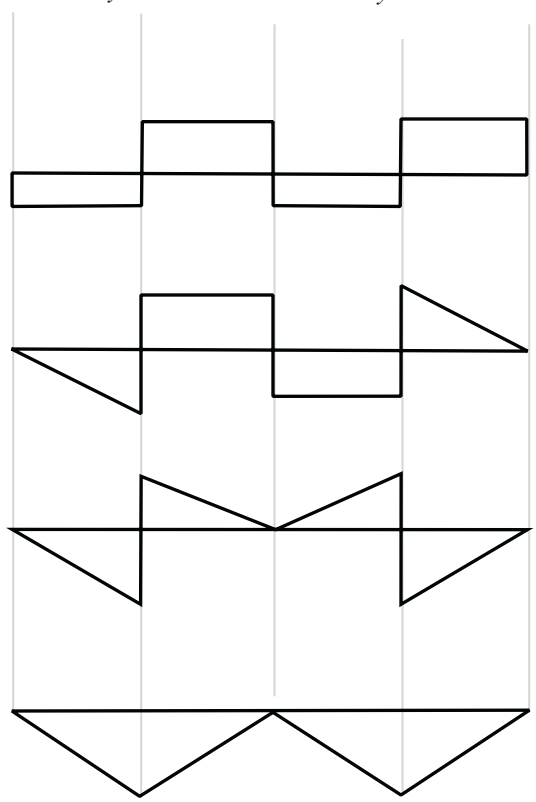

Problem: (Deflections)

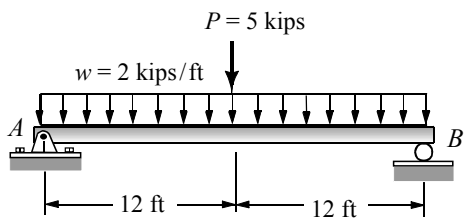

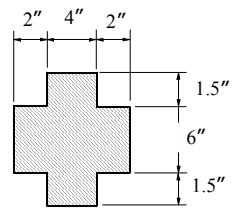

section

$E = 29 \times 10^6$ psi

FE EXAM

A simple beam is loaded as shown. The beam weight is included in the uniform load. Using the given cross-section and the modulus of elasticity answer the following questions:

(1) the max. deflection (in.) of the beam is most nearly (δ_{max})

(A) 0.75
(B) 1.00
(C) 1.91
(D) 2.50

(2) the slope (radians) at support A is most nearly (θ_A)

(A) 1.226
(B) 0.425
(C) 0.055
(D) 0.021

(3) the maximum moment (k.ft) in the beam is most nearly ($M_{\max}$)

(A) 174
(B) 250
(C) 285
(D) 316

Problem: (Deflections)

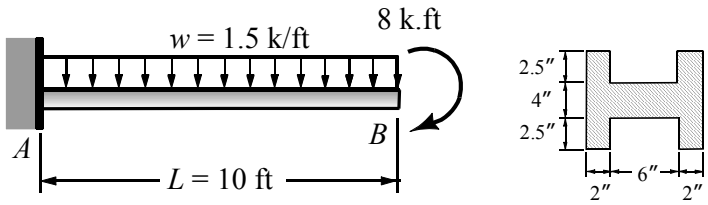

section

FE EXAM

$E = 29 \times 10^6$ psi

A cantilever beam is loaded as shown. The beam weight is included in the uniform load. Using the given cross-section and the modulus of elasticity answer the following questions:

(1) the max. deflection (in.) of the beam is most nearly (δ_B)

(A) 0.0367
(B) 0.4929
(C) 0.6525
(D) 1.4456

(2) the slope (rad.) at the free end of the beam is most nearly (θ_B)

(A) 0.06458
(B) 0.03782
(C) 0.00415
(D) 0.00596

(3) the moment at the support is most nearly (M_A)

(A) 75
(B) 83
(C) 90
(D) 105

Problem: (Beam Deflections)

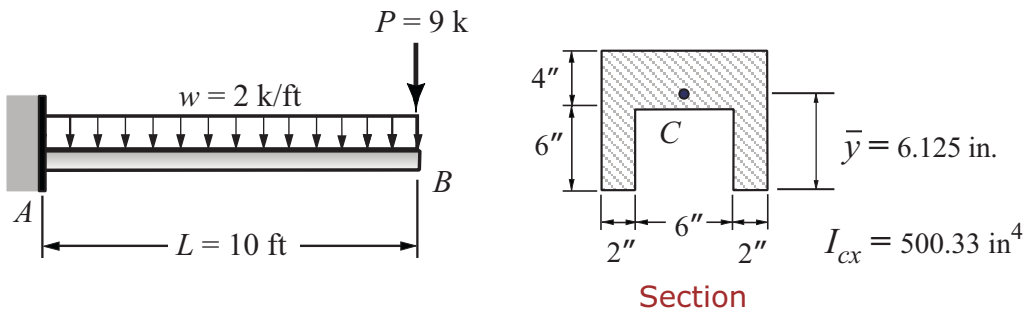

$E = 29 \times 10^6$ psi

A cantilever beam is loaded as shown. The beam weight is included in the uniform load. Using the listed data and the modulus of elasticity answer the following questions:

(1) the max. deflection (in.) of the beam is most nearly (δ_B)

(A) 0.5426
(B) 0.6550
(C) 0.0877
(D) 0.0915

(2) the max. slope (rad.) at the free end is most nearly (θ_B)

(A) 0.02153
(B) 0.01554
(C) 0.00777
(D) 0.00655

(3) the bending moment (k.ft) at the support is most nearly (M_A)

(A) 155
(B) 182
(C) 190
(D) 220

Problem: (Deflections)

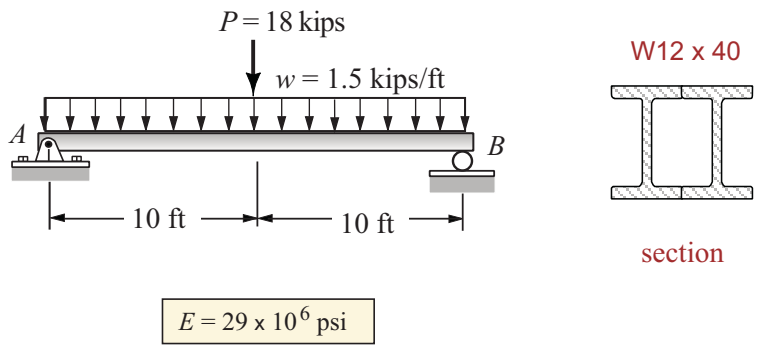

$E = 29 \times 10^6$ psi

A composite beam is made of two W 12 x 40 welded together. The beam weight is included in the uniform load. Using the given beam dimensions and loads answer the following questions:

(1) the max. moment (ft.kips) in the beam is most nearly

(A) 126
(B) 165
(C) 225
(D) 300

(2) the moment of inertia (in.^{4}) about the horizontal centroidal axis is most nearly (I_{cx})

(A) 307
(B) 515
(C) 614
(D) 720

(3) the max. deflection (in.) of the beam is most nearly

(A) 0.245
(B) 0.363
(C) 0.478
(D) 0.594

(4) the slope (radians) at the left support is most nearly

(A) 0.00985
(B) 0.00768
(C) 0.00643
(D) 0.02250

W 12 X 50

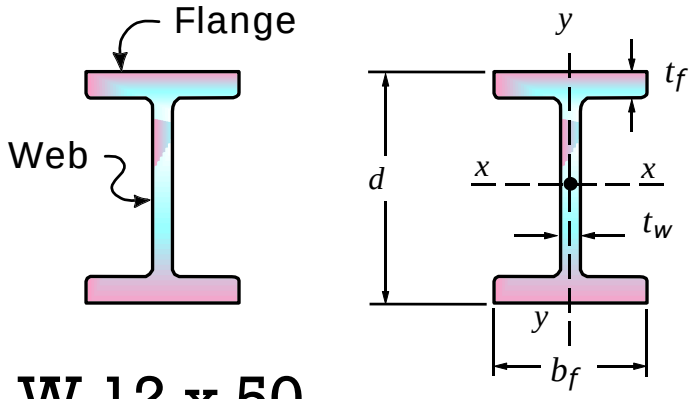

W 12 x 50

Nominal Depth (12 in.)

Weight 50 lb/ft

THIS SHEET GOES WITH
NCEES-REF. HANDBOOK
PAGE-355

- A = Area = 14.6 in^2
- d = Depth = 12.2 in.
- b_f = Flange Width = 8.08 in.
- t_f = Flange Thickness= 0.640 in.
- t_w = Web Thickness = 0.370 in.
- I_x = Moment of Inertia = 391 in^4
- I_y = Moment of Inertia = 56.3 in^4
- S_x = Section Modulus (x-x) = 64.2 in^3
- r_x = Radius of Gyration = 5.18 in
- Major axis or strong axis = (x-x)
- Minor axis or weak axis = (y-y)